Excel K4 Basic

Excel K4 with Swing-Back Desk-Length Arms and Swing-Away Footrests

Chair	Size	Arm Style	Leg Style
MDS806500NE	16 X 16	Swing-back desk-length arms	Swing Away Detachable Footrest
MDS806550NE	16 X 16	Swing-back desk-length arms	Swing Away Detachable Elevating Legrest
MDS806500E	18 X 16	Swing-back desk-length arms	Swing Away Detachable Footrest
MDS806550E	18 X 16	Swing-back desk-length arms	Swing Away Detachable Elevating Legrest
MDS806560E	20 X 18	Swing-back desk-length arms	Swing Away Detachable Footrest
MDS806565E	20 X 18	Swing-back desk-length arms	Swing Away Detachable Elevating Legrest

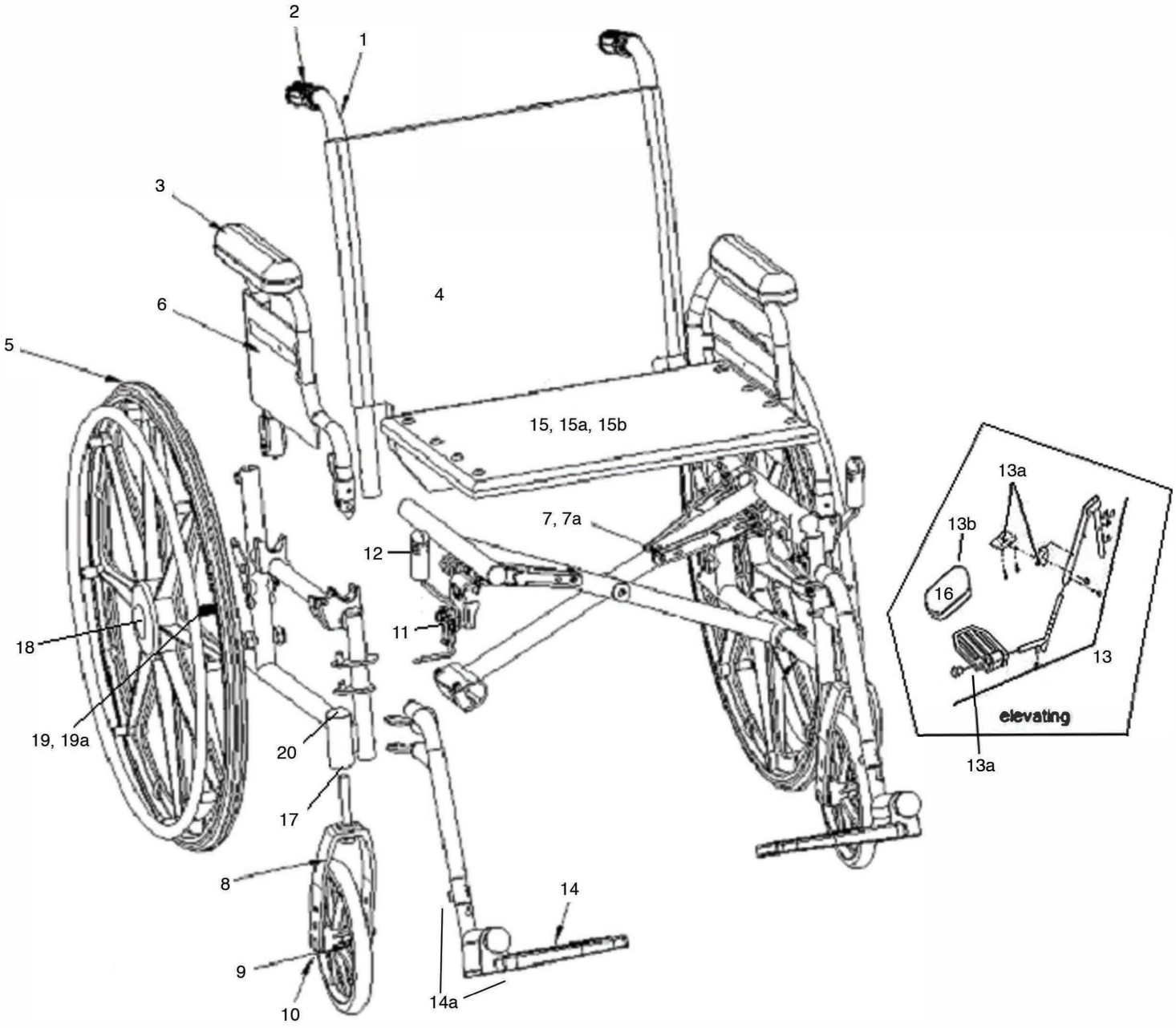

Excel K4 Basic Wheelchair Parts List

MDS806500NE, MDS806550NE, MDS806500E, MDS806550E, MDS806560E, MDS806565E

Number	Description	Part Number
1	UPPER HANDLES	WCA806100K4B
2	HANDGRIPS, PAIR	WCA806909
3	ARMREST PAD, DESK LENGTH, EACH	WCA806915NYL
4	BACK UPHOLSTERY – 18” (45.7cm)	WCA806925K4B
4a	BACK UPHOLSTERY – 16” (40.6cm)	WCA806936K4B
4b	BACK UPHOLSTERY – 20” (50.8cm)	WCA806928K4B
5	RUBBER REAR WHEEL W/BEARING AND HANDRIM, EACH	WCA806946
6	ARMREST, SWING BACK, DESK LENGTH, PAIR	WCA806968K4B
7	SUPPORT HOLDER, PLASTIC 16” (40.6cm) & 18” (45.7cm) ONLY	WCA806908K4B
7a	SUPPORT HOLDER, PLASTIC 16” (40.6cm) & 20-22” (50.8-55.8cm) ONLY	WCA806908K4BW
8	FRONT FORK HEMI HEIGHT ADJUSTABLE, BLACK, EACH	WCA806931K4B
9	FRONT CASTER 8”, W/BEARINGS, EACH	WCA806930K4B
	BEARINGS FOR FRONT CASTER, PAIR	WCA806935PR
10	AXLE & HARDWARE FOR FRONT CASTER, SET	WCA806933K4B
11	WHEEL LOCK ASSEMBLY, PAIR	WCA806990K4B
12	WHEEL LOCK HANDLE, BLACK RUBBER TIP, EACH	WCA806907
13	ELEVATING LEGREST ASSEMBLY, COMPOSITE, HEMI, PAIR	WCA806985E
13a	FOOTPLATE ASSEMBLY, COMPOSITE, PAIR	WCA806901
13b	BRACKET AND PLATFORM FOR CALF PAD, SET	WCA806919
14	FOOTREST ASSEMBLY, COMPOSITE, HEMI, PAIR	WCA806965E
14a	FOOTPLATE ASSEMBLY, COMPOSITE, PAIR	WCA806901
15	SEAT UPHOLSTERY – 18” (45.7cm)	WCA806920K4B
15a	SEAT UPHOLSTERY – 16” (40.6cm)	WCA806921K4B
15b	SEAT UPHOLSTERY – 20” (50.8cm)	WCA806926K4B
16	CALF PAD, EACH	WCA806918NYL
17	STEM BEARING FOR FRONT CASTER, PAIR	WCA806950PR
18	REAR WHEEL HUBCAP, EACH	WCA806902
19	AXLE FOR REAR WHEEL, EACH	WCA806951R
19a	REAR WHEEL BEARING, SET	WCA806955PR
20	DUST CAP, EACH	WCA806995
Not Shown	BOLT, PIVOT ELR	WCA806985PB
Not Shown	LEGREST MOUNTING PINS	WCA806910
Not Shown	Seat Guides	WCA806981

Excel K4

Excel K4 with Swing-Back Desk-Length Arms and Swing-Away Footrests

Chair	Size	Arm Style	Leg Style
MDS806500N	16” (40.6cm)	Swing-back desk-length arms	Swing-away footrests
MDS806500	18” (45.7cm)	Swing-back desk-length arms	Swing-away footrests
MDS806560	20” (50.8cm)	Swing-back desk-length arms	Swing-away footrests
MDS806570	22” (55.9cm)	Swing-back desk-length arms	Swing-away footrests

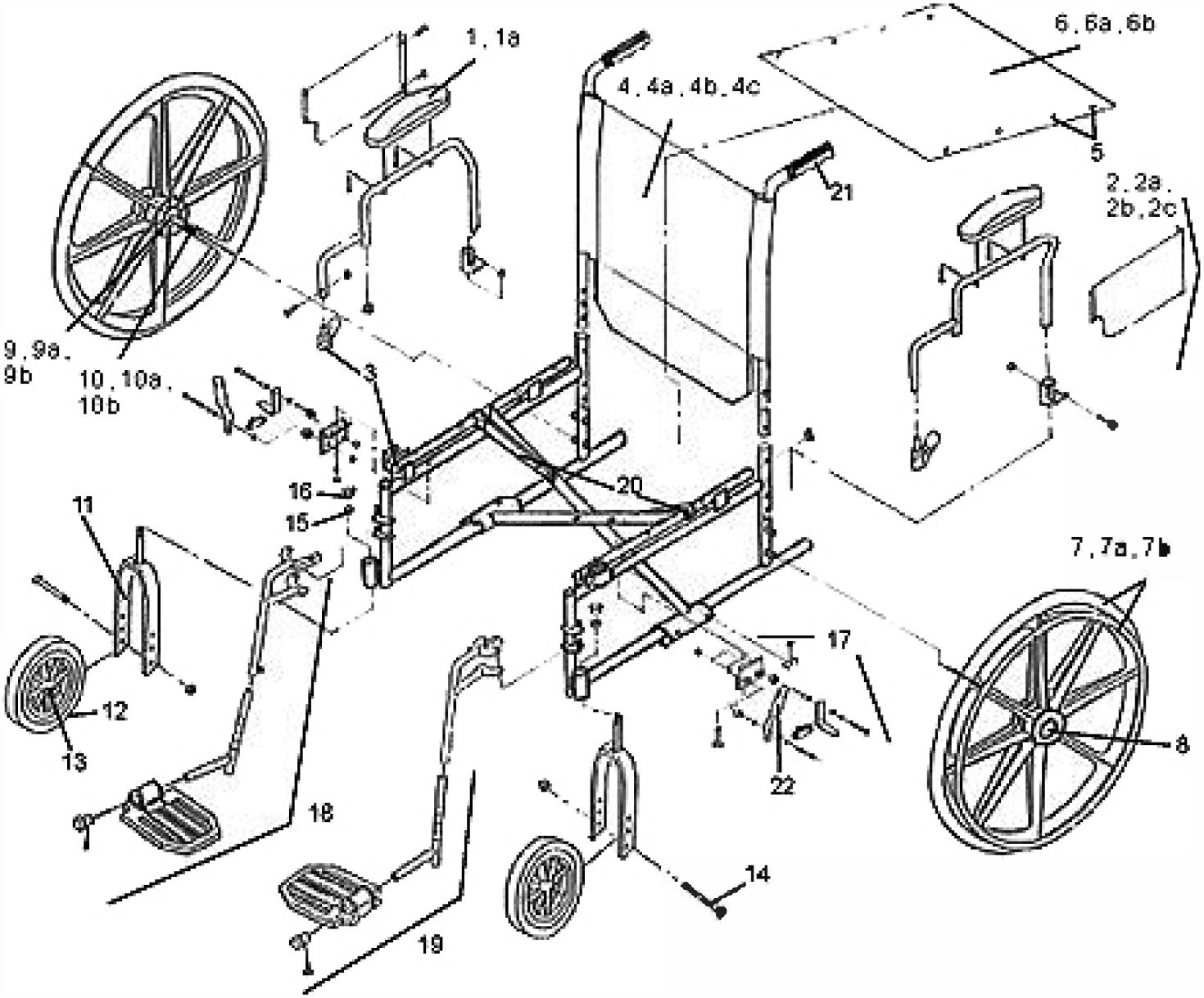

Wheelchair Parts Guide

Click here to view detailed product descriptions and prices. Call 800-397-5899 to order today!

Excel K4 Wheelchair Parts List

MDS806500N, MDS806500, MDS806560, MDS806570

Number	Description	Part Number
1	ARMREST PAD, DESK LENGTH, EACH	WCA806915NYL
1a	ARMREST PAD, FULL LENGTH, EACH	WCA806910NYL
2	ARMREST W/PAD ASSEMBLY, DESK LENGTH, SWING BACK	WCA806968K4
2a	ARMREST W/PAD ASSEMBLY, FULL LENGTH, SWING BACK	WCA806969K4
2b	ARMREST W/PAD ASSEMBLY, HEIGHT ADJ. DESK LENGTH, SWING BACK	WCA806962K4
2c	ARMREST W/PAD ASSEMBLY, HEIGHT ADJ. FULL LENGTH, SWING BACK	WCA806963K4
3	ARMLOCK ASSEMBLY	WCA806903K4
4	UPHOLSTERY SET W/SCREWS, 18” (45.7cm) WIDE	WCA806922K4S
4a	BACK UPHOLSTERY W/SCREWS, 16” (40.6cm) WIDE, NYLON	WCA806921K4S
4b	BACK UPHOLSTERY W/SCREWS, 20” (50.8cm) WIDE, NYLON	WCA806927K4S
4c	BACK UPHOLSTERY W/SCREWS, 22” (55.9cm) WIDE, NYLON	WCA806928K4
5	SCREW AND WASHERS FOR SEAT AND BACK UPHOLSTERY	WCA806975
6	SEAT UPHOLSTERY W/SCREWS, 16” (40.6cm) WIDE, NYLON	WCA806921K4S
6a	SEAT UPHOLSTERY W/SCREWS, 20” (50.8cm) WIDE, NYLON	WCA806927K4S
6b	SEAT UPHOLSTERY W/SCREWS, 22” (55.9cm) WIDE, NYLON	WCA806926K4
7	REAR WHEEL ASSEMBLY W/BEARING AND HANDRIM, EACH, NON QR	WCA806946
7a	REAR WHEEL ASSEMBLY 16” (40.6cm) & 18” (45.7cm) QR	WCA806946QR
7b	REAR WHEEL ASSEMBLY 20” (50.8cm) & 22” (55.9cm) QR	WCA806956QR1
8	REAR WHEEL HUBCAP, EACH	WCA806902
9	REAR WHEEL BEARING, SET, NON QUICK RELEASE	WCA806955PR
9a	REAR WHEEL BEARING, 16” (40.6cm) & 18” (45.7cm) QUICK RELEASE	WCA806955QR
9b	REAR WHEEL BEARING, 20” (50.8cm) & 22” (55.9cm) CHAIR, QUICK RELEASE	WCA806955QR1
10	AXLE FOR REAR WHEEL, NON QUICK RELEASE	WCA806951R
10a	QUICK RELEASE AXLE FOR WHEELCHAIR, 16” (40.6cm) & 18” (45.7cm) SEAT	WCA806951QR
10b	QUICK RELEASE AXLE FOR WHEELCHAIR, 20” (50.8cm) & 22” (55.9cm) SEAT	WCA806951QR1
11	FRONT FORK HEMI HEIGHT ADJUSTABLE, BLACK, EACH	WCA806931K4
12	FRONT CASTER 8” (20.3cm), W/BEARINGS, EACH	WCA806930
13	BEARINGS FOR FRONT CASTER, PAIR	WCA806935PR
14	AXLE & HARDWARE FOR FRONT CASTER, SET	WCA806933K4
15	STEM BEARING FOR FRONT CASTER, PAIR	WCA806950PR
16	DUST CAP, EACH	WCA806995
17	WHEEL LOCK ASSEMBLY PAIR	WCA806990R
18	FOOTREST ASSEMBLY COMPOSITE FOOTPLATE, HEMI, PAIR	WCA806965HCB
19	FOOTPLATE ASSEMBLY, COMPOSITE, PAIR	WCA806901
20a	SUPPORT HOLDER, PLASTIC 16” (40.6cm) & 18” (45.7cm) ONLY	WCA806908
20b	SUPPORT HOLDER, PLASTIC 20” (50.8cm) & 22” (55.9cm) ONLY	WCA806908W
21	HANDGRIPS, PAIR	WCA806909
22	WHEEL LOCK HANDLE, BLACK RUBBER TIP, EACH (PULL TO LOCK)	WCA806907
Not Shown	HEIGHT ADJUSTMENT KNOB	MDSK4KNOB
Not Shown	LEGREST MOUNTING PINS	WCA806910
Not Shown	HEIGHT ADJUSTMENT BUTTON	WCA806905K4

Excel K4

Excel K4 with Swing-Back Desk-Length Arms and Elevating Legrests

Chair	Size	Arm Style	Leg Style
MDS806550N	16” (40.6cm)	Swing-back desk-length arms	Eevating leg rests
MDS806550	18” (45.7cm)	Swing-back desk-length arms	Elevating leg rests
MDS806565	20” (50.8cm)	Swing-back desk-length arms	Elevating leg rests
MDS806575	22” (55.9cm)	Swing-back desk-length arms	Elevating leg rests

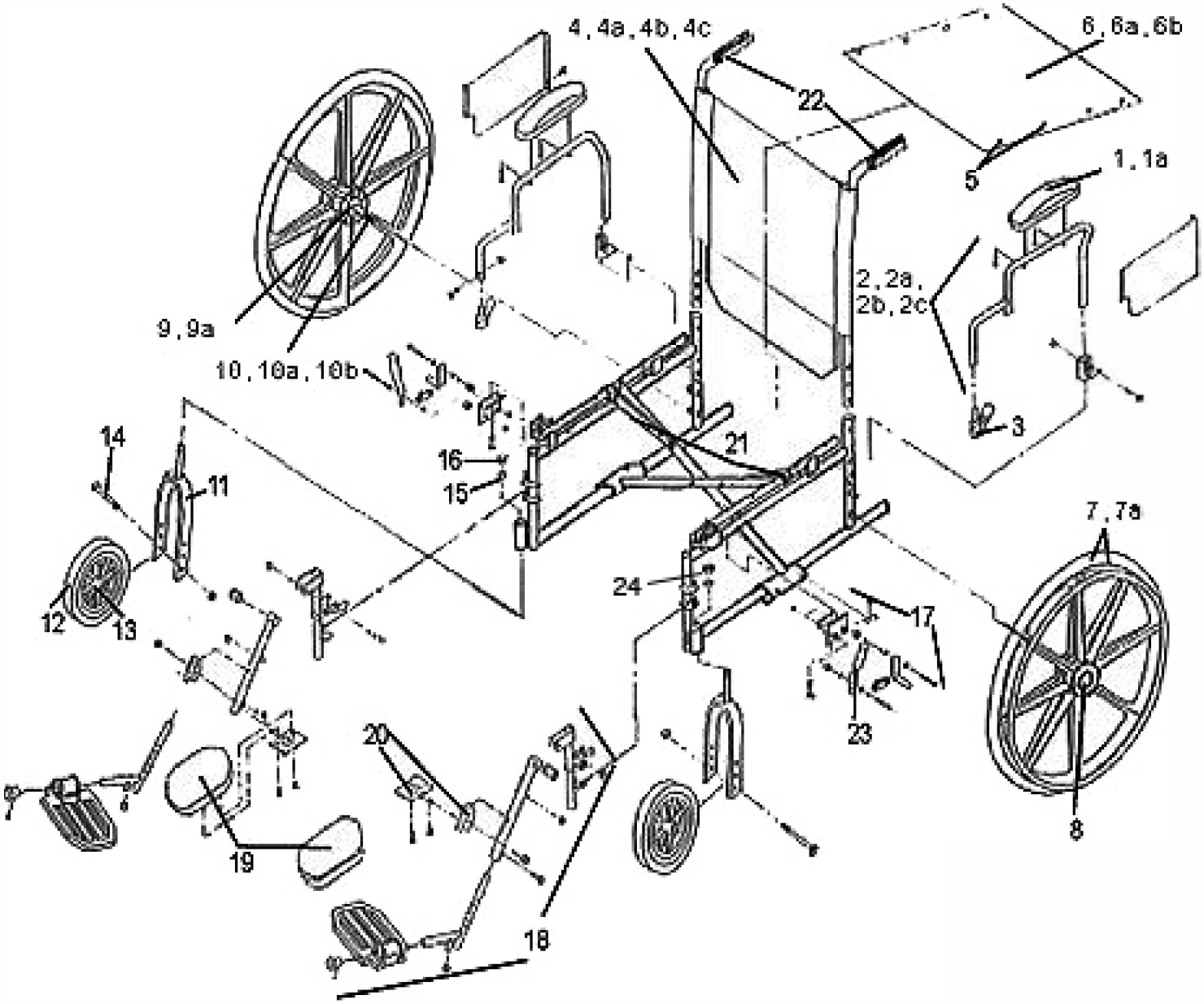

Excel K4 Wheelchair Parts List

MDS806550N, MDS806550, MDS806565, MDS806575

Number	Description	Part Number
1	ARMREST PAD, DESK LENGTH, EACH	WCA806915NYL
1a	ARMREST PAD, FULL LENGTH, EACH	WCA806910NYL
2	ARMREST W/PAD ASSEMBLY, DESK LENGTH, SWING BACK	WCA806968K4
2a	ARMREST W/PAD ASSEMBLY, FULL LENGTH, SWING BACK	WCA806969K4
2b	ARMREST W/PAD ASSEMBLY, HEIGHT ADJ. DESK LENGTH, SWING BACK	WCA806962K4
2c	ARMREST W/PAD ASSEMBLY, HEIGHT ADJ. FULL LENGTH, SWING BACK	WCA806963K4
3	ARMLOCK ASSEMBLY	WCA806903K4
4	UPHOLSTERY SET W/SCREWS, 18” (45.7cm) WIDE	WCA806922K4S
4a	BACK UPHOLSTERY W/SCREWS, 16” (40.6cm) WIDE, NYLON	WCA806921K4S
4b	BACK UPHOLSTERY W/SCREWS, 20” (50.8cm) WIDE, NYLON	WCA806927K4S
4c	BACK UPHOLSTERY W/SCREWS, 22” (55.9cm) WIDE, NYLON	WCA806928K4
5	SCREW AND WASHERS FOR SEAT AND BACK UPHOLSTERY	WCA806975
6	SEAT UPHOLSTERY W/SCREWS, 16” (40.6cm) WIDE, NYLON	WCA806921K4S
6a	SEAT UPHOLSTERY W/SCREWS, 20” (50.8cm) WIDE, NYLON	WCA806927K4S
6b	SEAT UPHOLSTERY W/SCREWS, 22” (55.9cm) WIDE, NYLON	WCA806926K4
7	REAR WHEEL ASSEMBLY W/BEARING AND HANDRIM, EACH, NON QR	WCA806946
7a	REAR WHEEL ASSEMBLY 16” (40.6cm) & 18” (45.7cm) QR	WCA806946QR
7b	REAR WHEEL ASSEMBLY 20” (50.8cm) & 22” (55.9cm) QR	WCA806956QR1
8	REAR WHEEL HUBCAP, EACH	WCA806902
9	REAR WHEEL BEARING, SET	WCA806955PR
9a	REAR WHEEL BEARING, 16” (40.6cm) & 18” (45.7cm) QUICK RELEASE	WCA806955QR
9b	REAR WHEEL BEARING, 20” (50.8cm) & 22” (55.9cm) CHAIR, QUICK RELEASE	WCA806955QR1
10	AXLE FOR REAR WHEEL, NON QUICK RELEASE	WCA806951R
10a	QUICK RELEASE AXLE FOR WHEELCHAIR, 16” (40.6cm) & 18” (45.7cm) SEAT	WCA806951QR
10b	QUICK RELEASE AXLE FOR WHEELCHAIR, 20” (50.8cm) & 22” (55.9cm) SEAT	WCA806951QR1
11	FRONT FORK HEMI HEIGHT ADJUSTABLE, BLACK, EACH	WCA806931K4
12	FRONT CASTER 8” (20.3cm), W/BEARINGS, EACH	WCA806930
13	BEARINGS FOR FRONT CASTER, PAIR	WCA806935PR
14	AXLE & HARDWARE FOR FRONT CASTER, SET	WCA806933K4
15	STEM BEARING FOR FRONT CASTER, PAIR	WCA806950PR
16	DUST CAP, EACH	WCA806995
17	WHEEL LOCK ASSEMBLY PAIR	WCA806990PR
18	ELEVATING LEGREST COMPOSITE FOOTPLATE, HEMI, W/CALF PAD, PAIR	WCA806985HCB
19	CALF PAD, EACH	WCA806918NYL
20	BRACKET AND PLATFORM FOR CALF PAD, SET	WCA806919
21a	SUPPORT HOLDER, PLASTIC, 16” (40.6cm) & 18” (45.7cm) ONLY	WCA806908
20b	SUPPORT HOLDER, PLASTIC 20” (50.8cm) & 22” (55.9cm) ONLY	WCA806908W
22	HANDGRIPS, PAIR	WCA806909
23	WHEEL LOCK HANDLE, BLACK RUBBER TIP, EACH (PULL TO LOCK)	WCA806907
24	LR PINS	WCA806910
Not Shown	HEIGHT ADJUSTMENT KNOB	MDSK4KNOB
Not Shown	BOLT, PIVOT ELR	WCA806985PB
Not Shown	LEGREST MOUNTING PINS	WCA806910
Not Shown	HEIGHT ADJUSTMENT BUTTON, PAIR	WCA806905K4

For Technical Assistance Call 1-800-289-9793