Aqua Creek Products
THE LEADERS IN RECREATION, FITNESS AND ABILITY!
9889 Garrymore Ln
Missoula, MT 59808
888-687-3552 | +1-406-549-0769
www.aquacreek.com

Patriot-AT1 Portable Lift

PART #: F-12PPL-HD-AT1-03
US PATENT NUMBER: [D507,769 S] [7,249,386 B2]
375 LB. [170 kg] MAXIMUM WEIGHT CAPACITY

MANDATORY
LEAVE THIS MANUAL WITH LIFT OWNER

Read and follow all instructions.
Lift safety can only be ensured if the lift is installed and operated according to these instructions.

- NEVER permit children to play on or around the lift
- Do not allow children to use the lift without adult supervision
- NEVER apply direct water pressure to the electronics
- Do not use the Patriot-AT1 for deck-to-waterline measurements over 12”
- NEVER operate lift without 600lbs of sand in ballast
- NEVER use the lift with a dry pool
- For safety reasons, NEVER swim alone

ADA COMPLIANT

Inspected And Verified To Meet Applicable Sections of ADA Guidelines Section 1009.2 By
wyle laboratories
A Registered ISO 9001 Laboratory

CE

READ CAREFULLY

Check entire box and inside all packing materials for parts. Before beginning assembly, read the instructions and identify parts using the figures and parts listed in this document.

It is critical all parts be carefully inspected by the installer prior to installation to ensure no damage occurred in transit and a damaged part is not used. If any damage occurred in transit, Aqua Creek Products, LLC must be notified within three days of receipt of unit.

Proper installation cannot be overstressed, as an improper installation voids Aqua Creek’s warranty and may affect the safety of the user.

Copyright © 2017 Aqua Creek Products All Rights Reserved

Revised 9/18/17

Patriot-AT1 Lift

Table of Contents

PAGE	DESCRIPTION	PAGE	DESCRIPTION
2	Patriot-AT1 Components	9	Basic Troubleshooting
3	ADA Installation Guidelines	10	Proper Care of Pool & Spa Lifts
4-5	Patriot-AT1 Lift Assembly Instructions	11-12	Patriot-AT1 Parts List
6	Fixing Kit Installation Instructions	13	Seat & Actuator Assembly Parts List
7-8	Patriot-AT1 Transportation Instructions	14	Warranty

Patriot-AT1 Components

1. PATRIOT-AT1 LIFT
2. LINAK BATTERY CHARGER
3. 24V LINAK BATTERY
4. VITO HANDSET REMOTE
5. SEAT BELT
6. PVC INSERT
7. 4 1/2" HEX BOLT
8. 1/2" FLAT WASHER
9. *HARDWARE PACKAGE
10. *ADA LIFT SIGN
11. *LUBRICANT PACKET
12. *600LBS OF SAND (NOT INCLUDED)

**ITEMS NOT SHOWN*

Copyright © 2017 Aqua Creek Products All Rights Reserved

Installation: ADA Guidelines

ADA REQUIREMENTS:
The Patriot-AT1 Lift is completely ADA Compliant when installed correctly.
The installation must meet the following requirements:

- Clear Deck Space Dimensions (see FIGURE 1)
- Centerline of seat between 16 inches and 22 inches from the pool edge
- Deck slope no greater than 1:48
- The seat must go at least 18 inches into the water. The lift should be installed at a location with 44 inches to 48 inches of depth (deck to pool floor)

*Setback distance will vary on curved walls, contact Aqua Creek

NOTE: The FIXING BOLT is used to fix the portable lift in place and to ensure that it remains in an ADA approved location. This makes the lift fully ADA compliant.

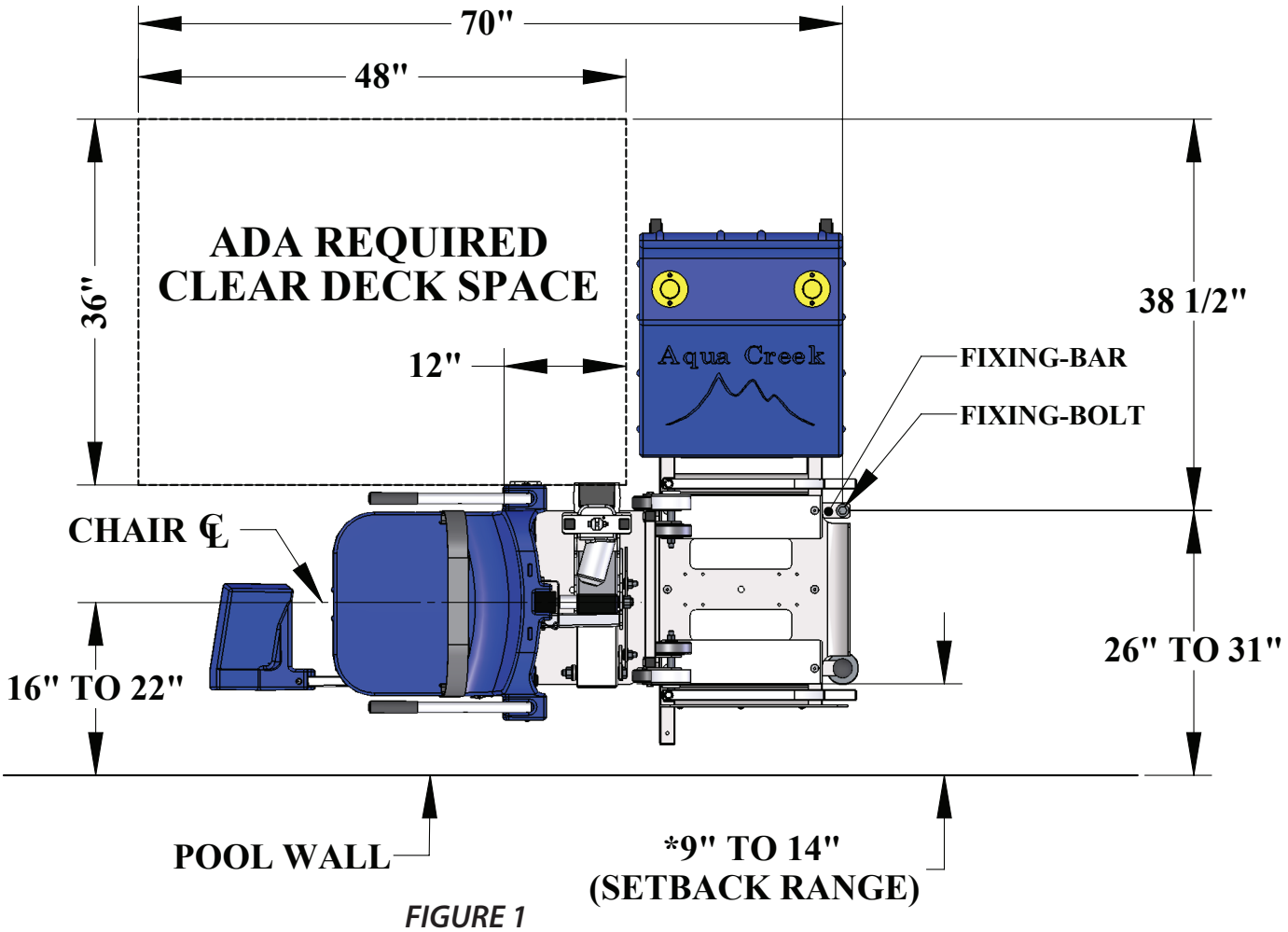

FIGURE 1

Copyright © 2017 Aqua Creek Products All Rights Reserved

Patriot-AT1 Assembly Instructions

NOTE:

Assembly will require twelve (12) 50lb bags (600lbs) of sand, not supplied with the lift.

DO NOT USE LIFT WITHOUT SAND AS A COUNTERWEIGHT!

1. Remove the assembled lift from the packaging and move to the pool side.

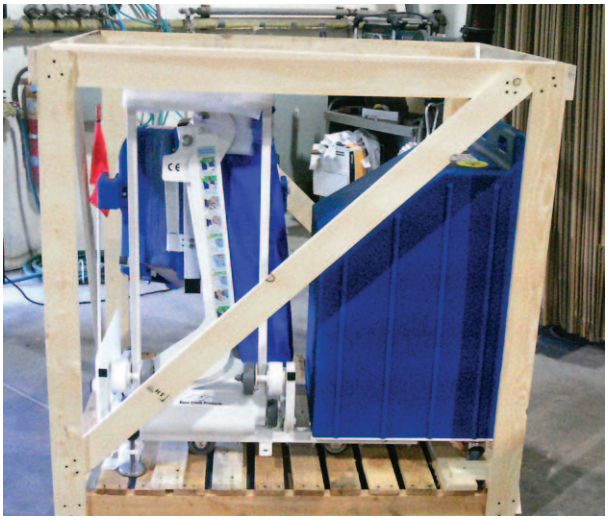

2. Situate the lift by the pool edge (refer to FIGURE 1, page 3) and lock the casters. Set brake by turning the brake knob clockwise until the brake foot comes into contact with the pool deck. NOTE: Brake is located on the front corner of the lift, behind the seat.
3. Attach the seat belt through the loops in the seat base and pinch the hook & loop material together. See diagram to right.
4. Place the battery on the charger and bring to a full charge.
5. Apply dielectric grease on the metal tabs of the battery and the control box on the lift.
6. Mount the battery onto the control box on the lift and snap the battery into place. Listen for a 'click' when the battery is installed properly. There should be no gap between the battery and control box. See FIGURE 2 to the right. **NOTE: To extend battery life, always store battery on the charger when the lift is not in service.**

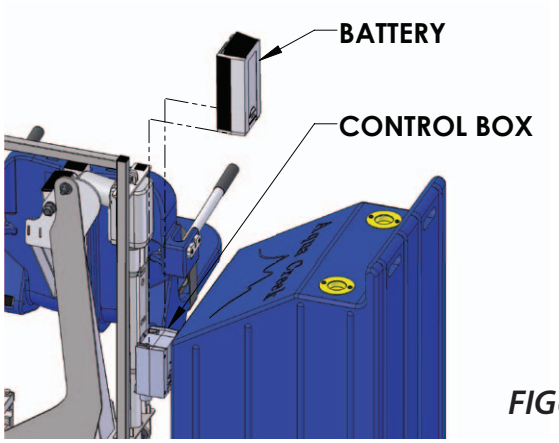

FIGURE 2

Copyright © 2017 Aqua Creek Products All Rights Reserved

Patriot-AT1 Assembly Instructions

6. Fill the ballast tank with sand (not included) outlined in FIGURE 3 below. Gently shake or tap the tank sides periodically to help level the sand. Alternate between fill ports to make sure sand is evenly distributed (use a large size funnel to help in this step).
7. With the counter weight now in place, deploy the lift from the cart so that the lift is in operation mode.

   DO NOT OPERATE LIFT IN THE TRANSPORT MODE!
8. Operate the lift without a load to verify that the lift will operate properly in the selected location. Check that there is enough clearance between the lift seat and the pool wall as the chair extends into the water.
9. When lift is confirmed to be in a proper location, a facility may choose to install a fixing kit. A fixing kit will affix the lift to the deck and is required for most commercial applications to be ADA compliant. See following page for detailed instructions.

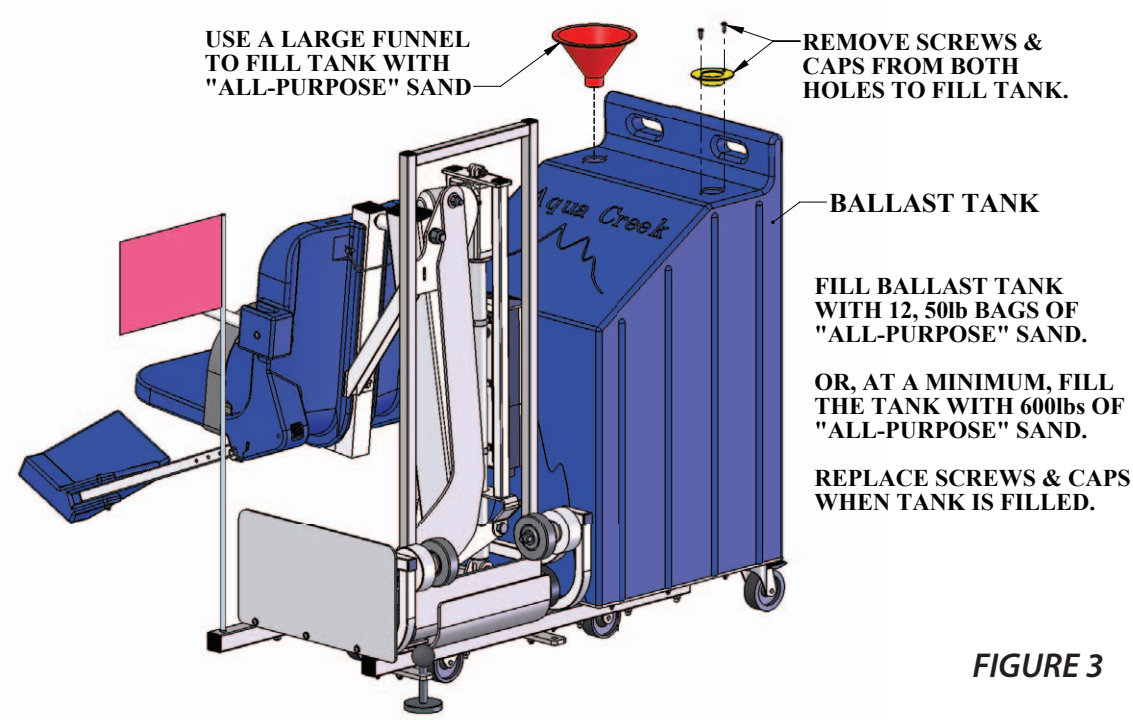

FIGURE 3

WARNING! DO NOT OPERATE THE LIFT BEFORE FILLING THE BALLAST TANK

Copyright © 2017 Aqua Creek Products All Rights Reserved

Patriot-AT1 Fixing Kit Installation Instructions

TOOLS REQUIRED:

- Core-drilling rig
- 1-1/4" diameter core-drill
- 3/4" wrench or socket
- 2-part construction epoxy or equivelent
- Tape measure
- Marking pen

NOTE: Fixing Kit installation is only required for ADA applications.

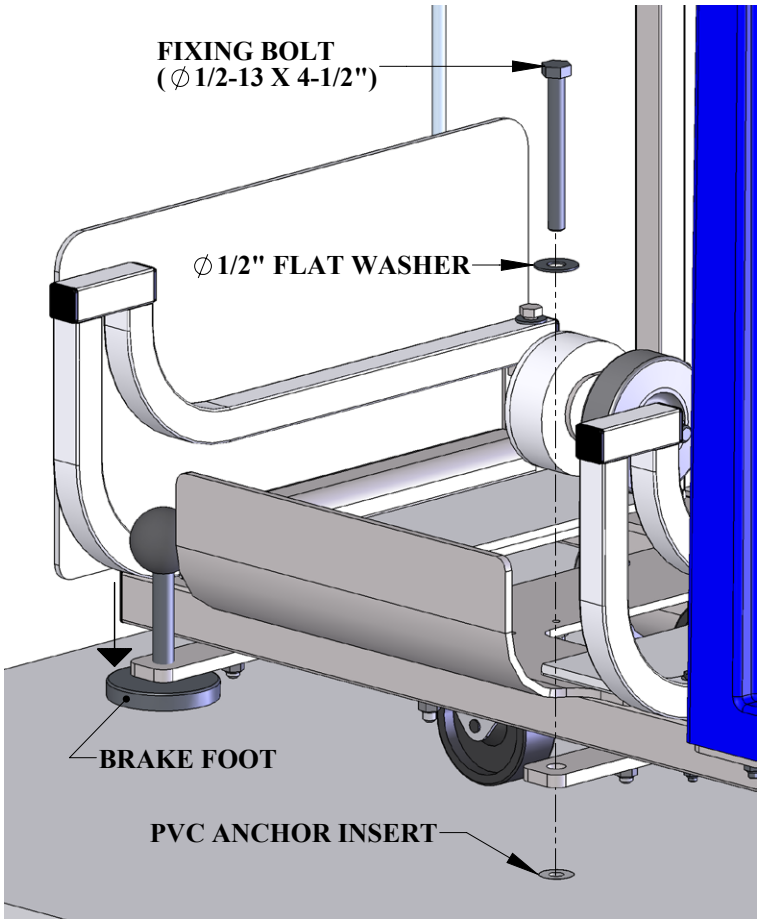

1. Determine the location of the anchor insert, allowing for the ADA compliant clear deck space. (see FIGURE 1, page 3)

2. Mark the location for the 1-1/4 inch x 4 inch deep anchor hole. Using a core-drill, drill a 1-1/4 inch diameter, 4 inch deep hole at the marked location.

3. Dry-fit the anchor insert to make sure it fits flush with the deck surface.

4. Fill the hole 1/2 full with epoxy (or equivalent). Install the anchor insert flush with the deck surface and clean off any excess. Allow 24 hours for the epoxy to cure.

5. Roll the portable cart over the installed anchor. Align the anchor with the fixing bar.

6. Drop the fixing bolt into the fixing bar and, by hand, start to thread into the anchor insert. If needed, adjust the alignment of the lift.

7. When properly aligned, complete threading with a 3/4 inch wrench or socket. Tighten until the bolt just touches the flat washer. DO NOT OVERTIGHTEN.

Copyright © 2017 Aqua Creek Products All Rights Reserved

Patriot-AT1 Transportation & Use

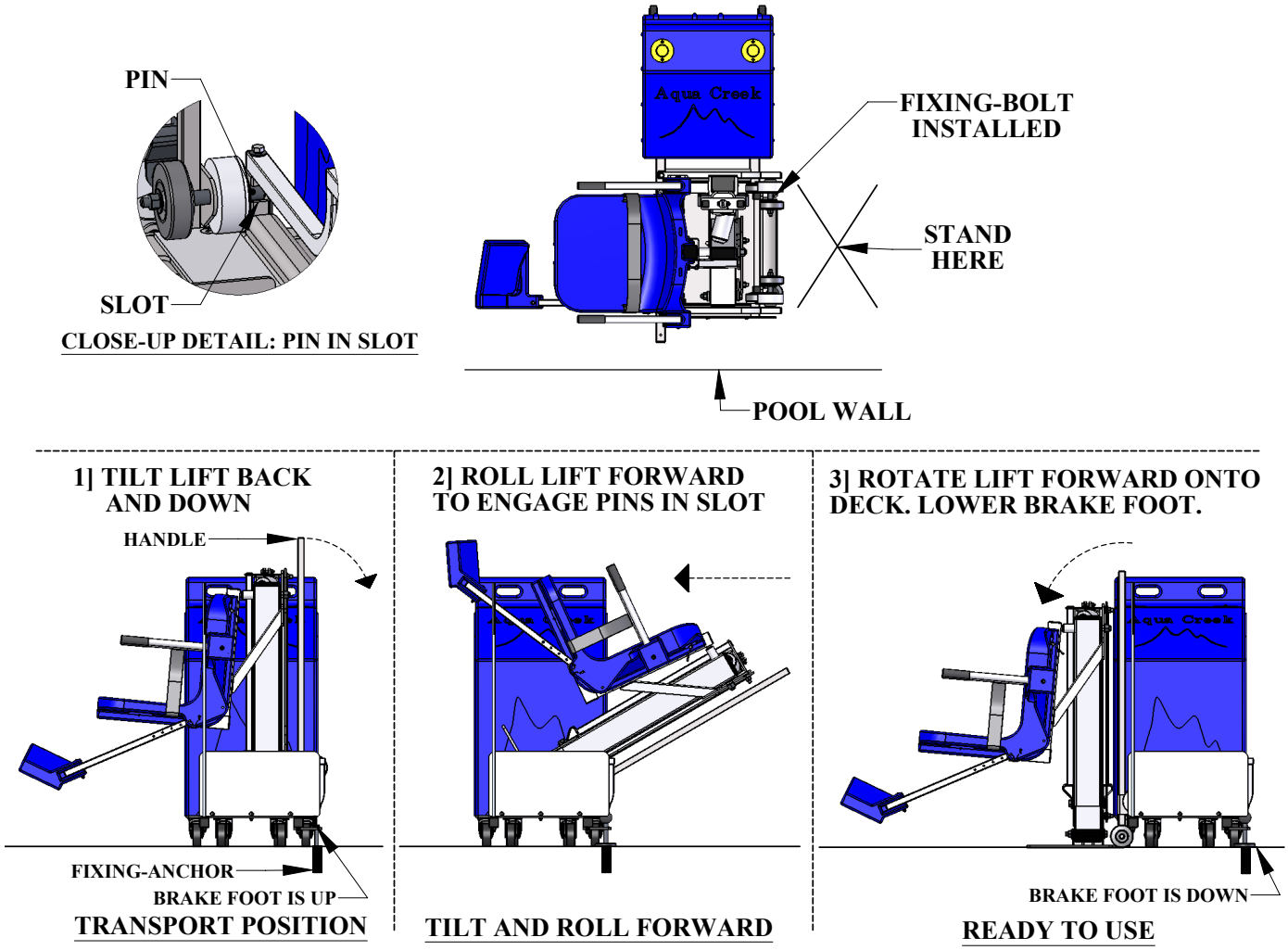

FIGURE A

1. Roll Patriot Lift to designated position on the deck and lock the casters. Install fixing-bolt (when required). Stand behind the lift to tilt it back and down using the handle. (see FIGURE A)

2. Roll the lift forward until it comes to the end and the pins engage with the slots.

3. Rotate the lift forward and down until it rests flat on the deck. Turn the handle of the brake-foot clockwise until the brake-foot is firmly in contact with the deck. The lift is now ready to use.

Video available at *aquacreekproducts.com/patriot*

Copyright © 2017 Aqua Creek Products All Rights Reserved

Returning The Patriot-AT1 To Transport Mode

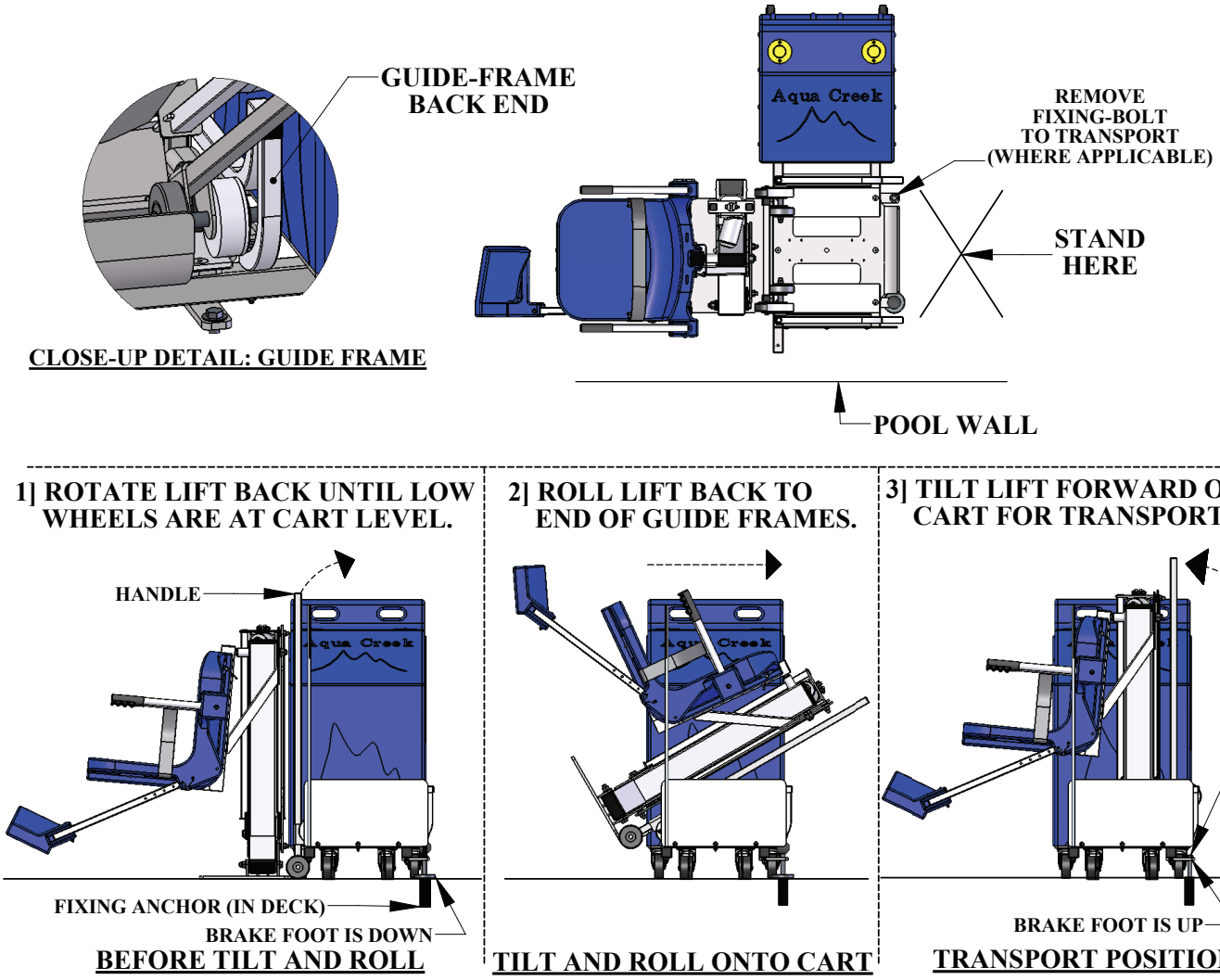

FIGURE B

1. Tilt the lift back and down until the lower wheels are at the cart level.

2. Roll the lift back and onto the cart. Roll all the way back to the end of the guide frames (see close-up detail).

3. Pivot the lift forward and down until it is resting on the cart. Rotate the brake-foot handle counter-clockwise and raise it off the deck. Remove the fixing bolt (if applicable) and unlock the casters.

The lift is now ready to move.

Copyright © 2017 Aqua Creek Products All Rights Reserved

Basic Troubleshooting

Problem: **The lift won't move.**

Solution:

1. Make sure the battery is properly seated:

You should hear a click when the battery is properly seated on the control box or charger.

NOT Properly Attached:
Note: the white bracket is in front of the silver clip, which will not allow for an electrical connection

Properly Attached:
Note: the white bracket is behind the silver clip, holding it securely to allow for an electrical connection

2. Make sure the cords are properly plugged in:

NOT Properly Inserted:
The cord plug is flush with or sticking out of the outlet

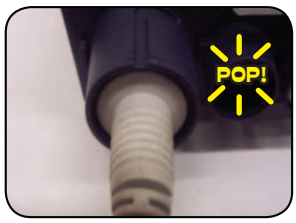

Properly Inserted:
The cord plug is recessed into the outlet

Check the ends of the cords for corrosion or damage. The cord plugs should be recessed into the outlet. You should feel them pop into place when they are correctly inserted.

3. Check the contact points:

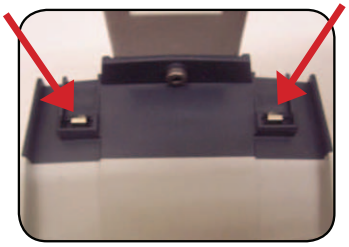

Make sure the contact points of the control box and the battery are not damaged or corroded. If there is corrosion clean with Scotch-Brite™ pad. Put some dielectric grease on the contact points before reattaching the battery.

4. Make sure the battery is fully charged:

The Charger is ON when the green light is glowing

The Battery is CHARGING when the orange light is glowing

When the Battery is charged the orange light will stop glowing

Problem: **The lift stopped moving over the water and is stuck.**

Solution:

1. Press the emergency button

Use a pen or pencil tip and stick it into the emergency button on the front of the control box to retract the lift.

Note: the lift will not retract if the battery is not fully charged or if the control box is not working. The emergency button only overrides the remote handset.

FOR TROUBLESHOOTING ASSISTANCE

Copyright © 2017 Aqua Creek Products All Rights Reserved

Proper Care of Pool & Spa Lifts

PROCEDURE	DAILY	WEEKLY	MONTHLY
Wash down lift with fresh water and dry with clean, soft, non-abrasive cloth.	✓		
Recharge battery.	✓		
Run the lift through a complete test cycle to verify it is functioning properly.	✓		
Visually inspect lift for damage, corrosion, and loose or missing hardware.	✓		
Check all contact points for damage and/or corrosion.		✓	
Repair, clean, and apply dielectric grease to all contact points.		✓	
Thoroughly clean lift frame and apply a liberal coat of car wax to maintain the lift's finish.			✓
Check all Warning and Cautionary labels to make sure they are not faded or worn. Replace as needed.			✓

PROPER CARE NOTES

- ***Use only fresh water to wash your lift. Do not wash with pool water.***
- **Use only clean, soft, non-abrasive cloths to wipe down your lift.**
- **Do not store lift in pump room or near chemicals.**
- **Do not allow children to play on or around this lift.**
- **When cleaning the lift, do not spray water directly on control box or battery.**
- **The lift may need to be bonded according to local code requirements.**

STAIN REMOVAL TIPS:

To remove stubborn stains from finish, spray affected area with mild dish soap, rub briskly with a 3M Scotch Brite™ pad. Use white epoxy paint to touch up the finish. Apply wax to protect when dry.

For service and/or replacement parts contact Aqua Creek direct at
Toll free: (888) 687-3552

Copyright © 2017 Aqua Creek Products All Rights Reserved

Patriot-AT1 Parts List

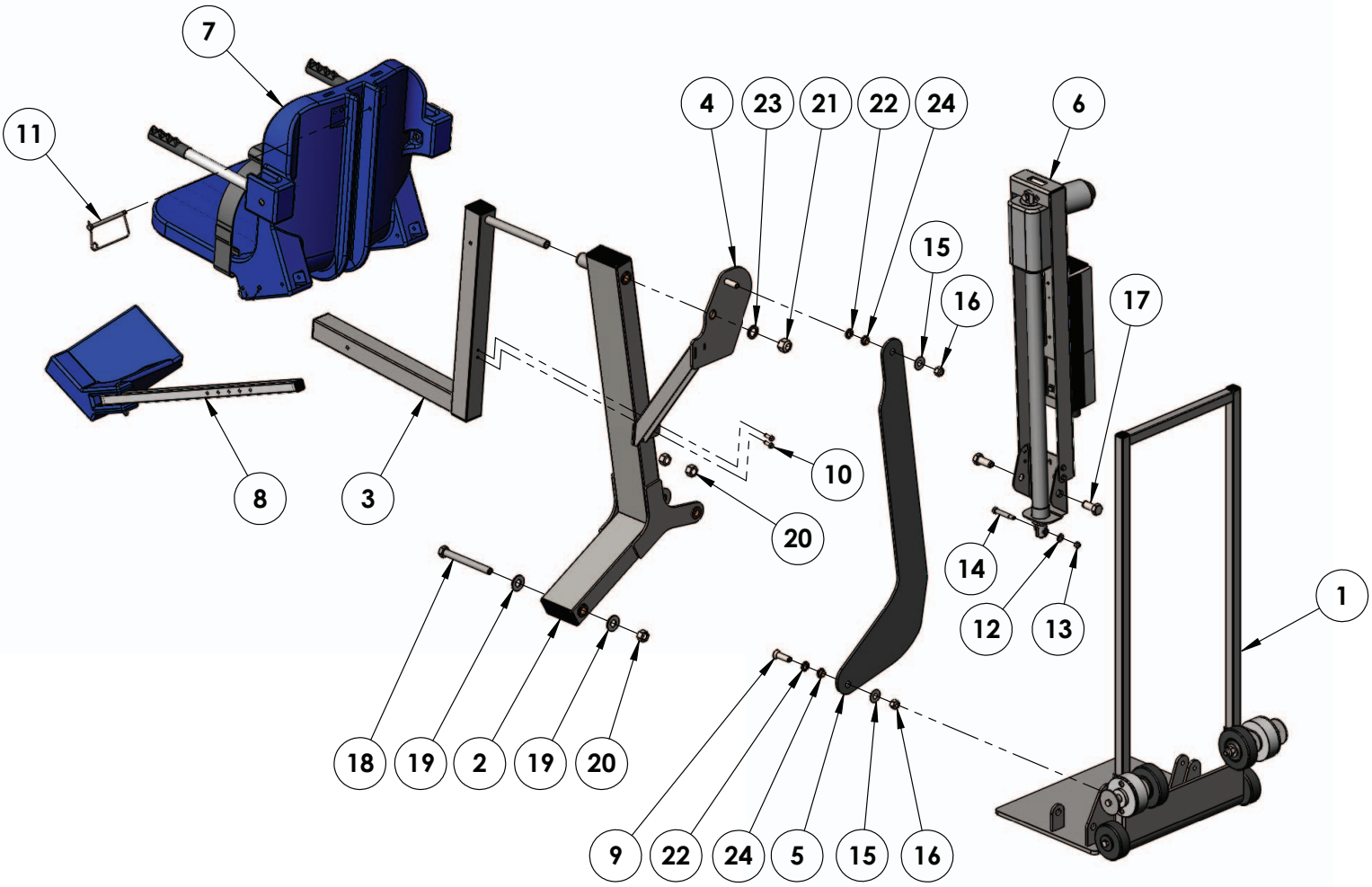

Item #	QTY	PART #	DESCRIPTION
1	1	RAT-200-18	PATRIOT-AT ROLL BASE ASSY
2	1	PPF-200-11	PRO POOL-AT MAIN FRAME ASSY
3	1	A-2012ARM-R1	PORTABLE CHAIR ARM ASSY
4	1	A-2012SRS2	PRO POOL SEAT SUPPORT
5	1	L-2014FBL-PAT-R2	RANGER-AT CONTROL ARM
6	1	UHF-PD-02	DEEP DRAFT ACTUATOR FRAME
7	1	SA-0904CA-A	18" CHAIR ASSEMBLY
8	1	F-0904FRA	FOOTREST ASSEMBLY
9	1	PPB-CCB-10	1/2" X 1 3/4" FLATHEAD BOLT
10	2	BHW 1/4 X 3/4	1/4"-20 X 3/4" HEX WASHER HEAD
11	1	SNAP PIN 5/16 X 4 1/2 SS	5/16" X 4 1/2" SNAP PIN
12	1	WF 5/16	5/16" FLAT WASHER
13	1	NN 5/16	5/16"-18 NYLOCK NUT

Item #	QTY	PART #	DESCRIPTION
14	1	BS 3/8 X 1 3/4 18-8	3/8" X 1 3/4" SHOULDER BOLT
15	2	WF 1/2	1/2" FLAT WASHER
16	2	NN 1/2	1/2"-13 NYLOCK NUT
17	2	BH 5/8 X 1 1/2	5/8"-11 X 1 1/2" HEX BOLT
18	1	BH 5/8 X 5 7/8 18-8	5/8"-11 X 5 7/8" HEX BOLT
19	2	WF 5/8	5/8" FLAT WASHER
20	3	NN 5/8	5/8"-11 NYLOCK NUT
21	1	NN 3/4	3/4"-10 NYLOCK NUT
22	2	THRUST WASHER, 1/2, BRONZE	1/2" BRONZE WASHER
23	1	THRUST WASHER, 3/4, BRONZE	3/4" BRONZE WASHER
24	2	BRB FL-50-3	1/2" X 5/8" X 3/8" X 1/8" BRONZE FLANGE BUSHING

Copyright © 2017 Aqua Creek Products All Rights Reserved

Patriot-AT1 Portable Cart Parts List

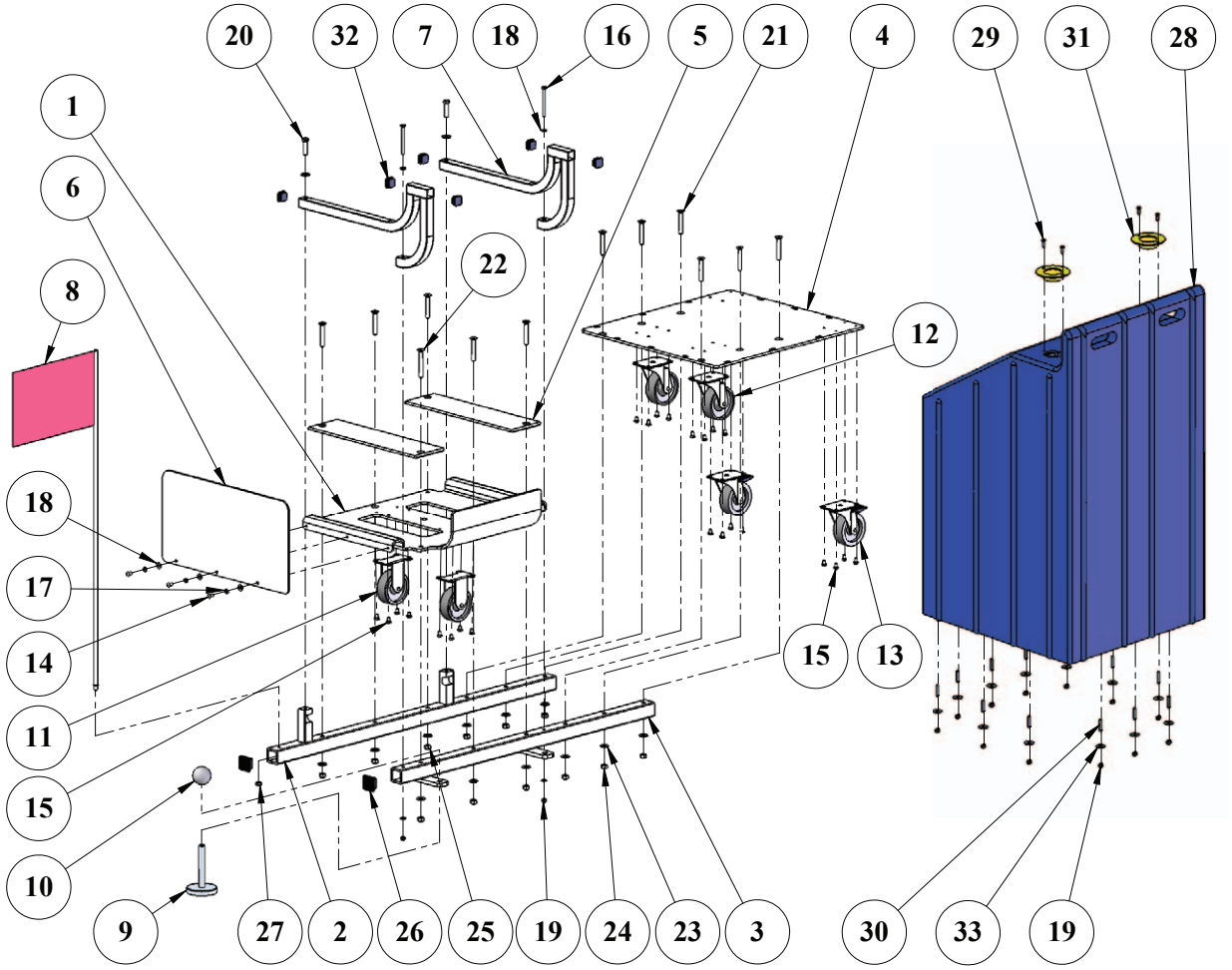

Item #	QTY	PART #	DESCRIPTION
1	1	RAT-110-00	AT CART TRAY
2	1	RATWM-120-01	AT CART WELDMENT A
3	1	RATWM-130-00	AT CART WELDMENT B
4	1	P-0138PBP-REVA2	PORTABLE CART BASEPLATE
5	2	P-0138PCPS-REVB	PORTABLE CART PLASTIC SLIDE
6	1	P-0138PCPG-REVB	PORT. CART SIDE GUARD, PLASTIC
7	2	A-0138GFA-REVC	GUIDE-FRAME ASSEMBLY, REV C
8	1	SAFETY FLAG	FLAG, SAFETY FLAG
9	1	1942K76	BRAKE, FOOT
10	1	65137374	PATRIOT BRAKE HANDLE
11	2	2.03408.471	CASTER, 304 SS, FIXED 3 1/2"
12	2	2.03456.471	CASTER, 304 SS, SWIVEL 3 1/2"
13	2	2.03456.471BRK2	CASTER, 304 SS, 3-1/2" WITH BRAKE
14	3	BB 1/4 X 1/2	BOLT, 316 SS, 1/4-20 X 1/2 BHSCS
15	24	BHW 1/4 X 3/8	BOLT, 316 SS, 1/4-20 X 3/8 HWH
16	2	BH 1/4 X 3	BOLT, 316 SS, 1/4-20 X 3 HCS
17	3	WL 1/4	LOCK WASHER, 1/4", 316 SS

Item #	QTY	PART #	DESCRIPTION
18	7	WF 1/4	WASHER, FLAT, 1/4, 316 SS
19	14	NN 1/4	NUT, 316 SS, NYLOCK, 1/4"-20
20	2	BH 3/8 X 1-1/2	BOLT, 316 SS, 3/8-16 X 1 1/2 HCS
21	10	BC 3/8 X 2-1/2	BOLT, 316 SS, 3/8-16 X 2 1/2 FHSCS
22	2	BC 3/8 X 3	BOLT, 316 SS, 3/8-16 X 3 FHSCS
23	14	WF 3/8	WASHER, FLAT, 3/8, 316 SS
24	10	NN 3/8	NUT, 316 SS, NYLOCK, 3/8"-16
25	2	NNJ 3/8	NUT, 316 SS, NYLOCK, 3/8"-16, JAM NUT
26	2	SQR-1-1/2-10-14	CAP, PLASTIC, 1.5" SQUARE
27	1	NHJF 3/8	NUT, 316 SS, HEX, 3/8"-24, JAM NUT
28	1	P-985BB	COVER, PLASTIC, BALLAST WEIGHT COVER, BLUE
29	4	SPH 12 X 3/4	SCREW, 316 SS, #12 X 3/4" PHSMS
30	12	SSE 1/4 X 1-1/4	SCREW, 1/4"-20 X 1 1/4", SET SCREW
31	2	WWX-21 PLUG	TAPERED CAP, YELLOW
32	6	SQR-1-14-20	CAP, PLASTIC, 1"X1" SQUARE
33	12	WFE 1/4	WASHER, FENDER, 316 SS, 1/4 X 1

Copyright © 2017 Aqua Creek Products All Rights Reserved

Seat Assembly Parts List

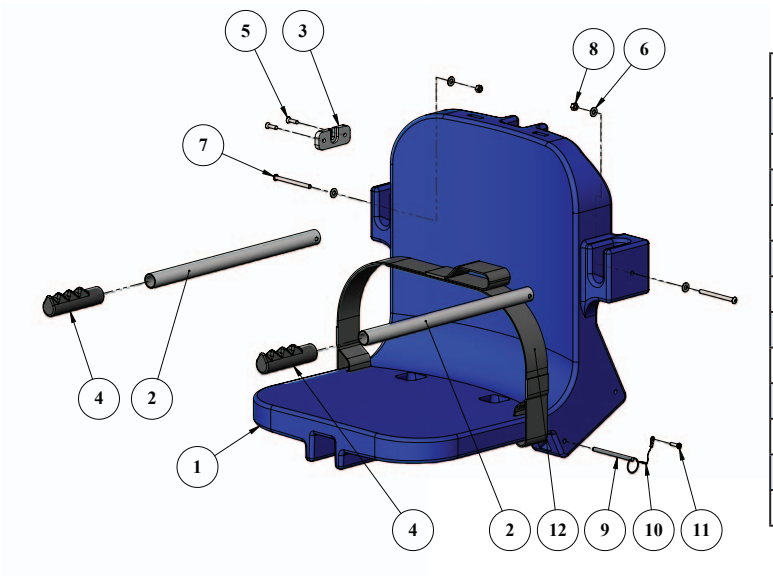

ITEM #	QTY	PART #	DESCRIPTION
1	1	P-901	CHAIR, PLASTIC, 18" BLUE
2	2	P-2100FLA-38	CHAIR II ARMREST TUBE
3	1	P-1208HSB	BRACKET, PLASTIC, HANDSET BRACKET
4	2	RUBBER HAND GRIP	GRIP, RUBBER HAND GRIP
5	2	SFL 12 X 3/4	SCREW, 316 SS, #12 X 3/4", FHSMS
6	4	WF 1/4	WASHER, FLAT, 1/4, 316 SS
7	2	BB 1/4 X 3-1/4	BOLT, 316 SS, 1/4-20 X 3 1/4 BHSCS
8	2	NN 1/4	NUT, 316 SS, NYLOCK, 1/4"-20
9	1	COTTER PIN, 1/4 X 3 1/4	PIN, COTTERLESS PIN, 18-8 SS, 1/4 X 3 3/4
10	1	LANYARD	LANYARD, FOR FOOTREST PIN, SS
11	1	SPH 10 X 3/4	SCREW, 316 SS, #10 X 3/4", PHSMS
12	1	F-38SB	SEATBELT, 2" WIDE W/ VELCRO

Actuator Assembly Parts List

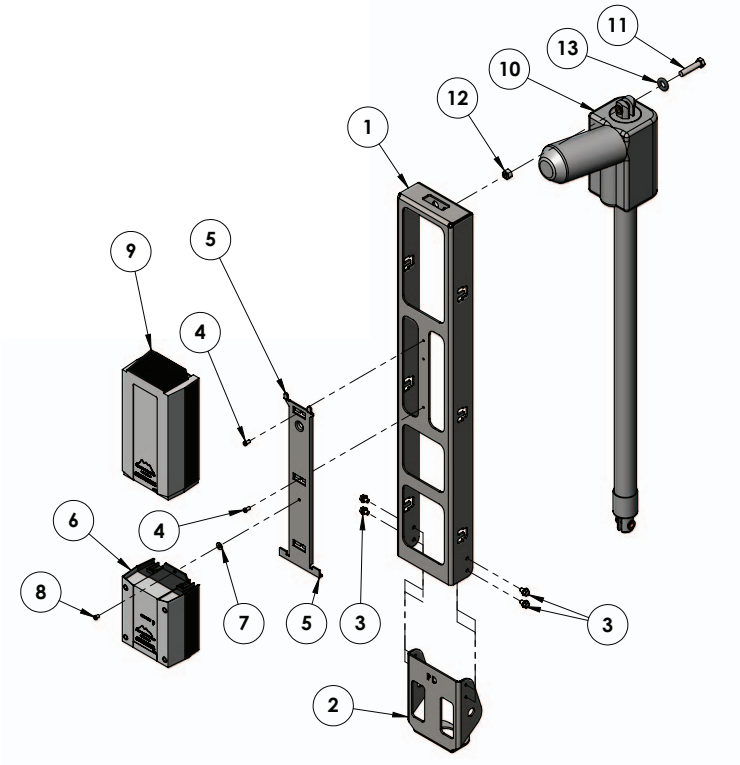

ITEM #	QTY	PART #	DESCRIPTION
1	1	UHF-101-02	UNIVERSAL ACTUATOR FRAME
2	1	UHF-103-01	DEEP DRAFT ACTUATOR FRAME BRACKET
3	4	BHW 1/4 X 3/8	1/4"-20 X 3/8" HEX WASHER HEAD BOLT
4	2	BSH 10 X 3/8	10-24 X 3/8" SOCKET HEAD CAP SCREW
5	1	MBJ2-01	LINAK CONTROL BOX BRACKET
6	1	CBJ2-U022-00	LINAK CONTROL BOX
7	1	WF 10	#10 FLAT WASHER
8	1	M5 LPCS	CONTROL BOX SCREW
9	1	BAJ1-U022-00	LINAK 24 VOLT BATTERY
10	1	340643-00	LINAK ACTUATOR, LA-34
11	1	BH 3/8 X 1 3/4	3/8"-16 X 1 3/4" HEX BOLT
12	1	NN 3/8	3/8"-16 NYLOCK NUT
13	1	9452K205	GENERAL PURPOSE O-RING

Copyright © 2017 Aqua Creek Products All Rights Reserved

AQUA CREEK PRODUCTS, LLC LIMITED FIVE (5) YEAR WARRANTY:

PATRIOT POOL LIFT

(ITEM #'s F-12PPL-HD-AT1, 12PPL-HD-AT2)

Aqua Creek Products, LLC (a.k.a. Aqua Creek) warrants to the original end user purchaser that products manufactured by Aqua Creek, when properly installed in accordance with assembly and installation instructions, and properly used and maintained, shall be free from defects in material and workmanship for a period of **five (5) years from the date of original purchase**, provided that Aqua Creek receives prompt notice in writing of any defect or failure and satisfactory proof thereof, with the following exception(s):

Exceptions:

- All electrical components, including the linear actuator shall have the following warranty period:
  - Year 1-2: 100% Coverage
  - Year 3: 60% Coverage (Customer is responsible for 40% of replacement cost)
  - Year 4: 50% Coverage (Customer is responsible for 50% of replacement cost)
  - Year 5: 40% Coverage (Customer is responsible for 60% of replacement cost)
- Hydraulic actuators and mesh slings shall have a warranty period of **one (1) year from the date of original purchase**.
- Powder coat finish scratches, scrapes, corrosion, or dents from customers normal use, negligence, or abuse

This warranty specifically excludes reimbursement for labor to remove, repair, or install the product and any shipping charges. These warranties do not cover any damages due to accident, force majeure, act of nature, misuse, abuse, negligence or failure to properly maintain any products, or normal wear and tear from day to day operations. In the event that any products are altered, repaired, or improperly installed or improperly used by anyone without the prior written approval by Aqua Creek, all warranties are void. IMPORTANT: AMOUNT OF WEIGHT PLACED ON LIFT SHALL NOT EXCEED THE RATED LIFTING CAPACITY FOR THE LIFT. NEVER OPERATE THE LIFT UNDER LOAD IN A DRY POOL (WITH NO WATER IN THE POOL). It is the responsibility of the lift owner to verify the weight of the patron for warranty claim purposes and to ensure that the lift is not overloaded. Non-payment for product to Aqua Creek may void warranty.

To initiate a warranty claim, the owner of an Aqua Creek product must provide the place of purchase, in writing, with a full description of the product, its serial number, the dates of purchase and installation, and the exact nature of the defect. Within thirty (30) days after receipt of a written warranty claim by Aqua Creek, and barring any unforeseen delays, the place of purchase will be notified of Aqua Creek's decision regarding the claim.

If requested by Aqua Creek, any defective product must be returned, freight prepaid by customer, to Aqua Creek's designated factory location or duly appointed distributor for inspection and/or repair. Aqua Creek will, at its option, repair or replace the failed or defective item, and deliver the repaired product or replacement to the customer. All freight charges are the responsibility of the customer. Products returned to Aqua Creek for which Aqua Creek provides replacement under this limited warranty shall become the property of Aqua Creek. A new warranty period shall **NOT** be established for the repaired or replaced products. Such products shall remain under warranty only for the remainder of the original warranty period on the original products purchased.

This written limited warranty constitutes the final, complete and exclusive statement of warranty terms. No person or organization is authorized to make any other specific or implied warranties or representations on behalf of Aqua Creek.

THE WARRANTIES SET FORTH HEREIN ARE IN LIEU OF ALL OTHER WARRANTIES, EXPRESSED OR IMPLIED, WHICH ARE HEREBY DISCLAIMED AND EXCLUDED, INCLUDING WITHOUT LIMITATION ANY WARRANTY OF MERCHANTABILITY OR FITNESS FOR A PARTICULAR PURPOSE OR USE.

THE SOLE AND EXCLUSIVE REMEDIES FOR BREACH OF ANY AND ALL WARRANTIES WITH RESPECT TO THE PRODUCTS SHALL BE LIMITED TO REPAIR OR REPLACEMENT AT AQUA CREEK'S DESIGNATED FACTORY LOCATION, OR DULY APPOINTED DISTRIBUTOR, OR IN PLACE AT AQUA CREEK'S OPTION. IN NO EVENT SHALL AQUA CREEK'S LIABILITY EXCEED THE ENTIRE AMOUNT PAID TO AQUA CREEK BY THE ORIGINAL PURCHASER FOR THE FAILED OR DEFECTIVE PRODUCT.

IN NO EVENT SHALL AQUA CREEK PRODUCTS, LLC BE LIABLE FOR ANY INCIDENTAL, CONSEQUENTIAL, SPECIAL, INDIRECT, PUNITIVE OR EXEMPLARY DAMAGES OR LOST PROFITS FROM ANY BREACH OF THIS LIMITED WARRANTY OR OTHERWISE.

THIS WARRANTY GIVES YOU SPECIFIC LEGAL RIGHTS AND YOU MAY ALSO HAVE OTHER RIGHTS, WHICH MAY VARY FROM STATE TO STATE. SOME STATES DO NOT ALLOW THE EXCLUSION OR LIMITATION OF INCIDENTAL, SPECIAL OR CONSEQUENTIAL DAMAGES, SO SOME OF THE ABOVE LIMITATIONS OR EXCLUSIONS MAY NOT APPLY TO YOU.

Aqua Creek Products, LLC
9889 Garrymore Lane
Missoula, MT 59808
Toll Free: (888) 687-3552
Local/Intnl: (406) 549-0769
www.aquacreek.com

Copyright © 2017 Aqua Creek Products All Rights Reserved

Aqua Creek Products®

THE LEADERS IN **RECREATION, FITNESS** AND **ABILITY!**

PRO-POOL SERIES ACCESSORIES

Pro Pool, Ranger, Ambassador, Patriot, Portable Pro Pool

COVER

F-120PPC	Lift Cover - Ranger/ Pro Pool/ Ambassador/ Patriot/ Portable Pro Pool
F-45ACB-C	Actuator Cover - Ranger/ Pro Pool/ Patriot/ Ambassador/ Portable Pro Pool

SOLAR CHARGERS

F-043SCH	Patriot
F-044SCH	Pro Pool/ Ambassador/ Ranger

ACCESSORIES & OPTIONS

F-423CS	Chest Strap
F-019CA	Cycle Attachment
F-422PLH-2	Headrest (all other lifts)
F105LAR	Pull-Out Legrest
F-38SB	Seat Belt, Standard
F-ASAPRL	Seat Pole Option Adjustable Height (Ranger only)

TRANSPORT CARTS

F-428HT	Ranger/ Pro Pool
F-914STC	Ambassador

UPGRADE PACKS

F-004PLBAP	Transport Cart w/Linak Controls - Pro Pool
F-004PLBAPV	Transport Cart w/Vito Controls - Ranger
F-950SAPV	Transport Cart - Ambassador
F-12PPAP	Patriot/ Pro Pool

UPGRADE PACKS INCLUDE**

Lift Cover
Extra Battery
Headrest
Chest Strap

+1-406-549-0769 | 888-687-3552

sales@aquacreek.com | www.aquacreek.com