Owner's Operator and Maintenance Manual

ValueCare Bed Series

Single Motor Semi-Electric Bed

ValueCare
ValueCare Duo

For more information regarding bed rail safety, refer to the Bed Rail Entrapment Risk Notification Guide at www.invacare.com.

DEALER: This manual must be given to the user of the bed.

USER: Before using this bed, read this manual and save for future reference.

For more information regarding Invacare products, parts, and services, please visit www.invacare.com

INVACARE®

Yes, you can.®

⚠ WARNING

DO NOT use this product or any available optional equipment without first completely reading and understanding these instructions and any additional instructional material such as owner's manuals, service manuals or instruction sheets supplied with this product or optional equipment. If you are unable to understand the warnings, cautions or instructions, contact a healthcare professional, dealer or technical personnel before attempting to use this equipment - otherwise, injury or damage may occur.

The initial set up of this bed must be performed by a qualified technician.

Procedures other than those described in this manual must be performed by a qualified technician.

For Dealers Only - Set-up and Assembly Instructions are in the rear of this manual. These procedures must be performed by a qualified technicians only.

⚠ ACCESSORIES WARNING

Invacare products are specifically designed and manufactured for use in conjunction with Invacare accessories. Accessories designed by other manufacturers have not been tested by Invacare and are not recommended for use with Invacare products.

*NOTE: Refer to the **Bed Rail Entrapment Risk Notification Guide** at www.invacare.com for additional safety information.*

NOTE: Updated versions of this manual are available on www.invacare.com.

TABLE OF CONTENTS

SPECIAL NOTES **5**

LABEL LOCATIONS **6**

TYPICAL PRODUCT PARAMETERS **7**

SECTION 1—GENERAL GUIDELINES **8**

Important Safety Instructions 8
Operating Information 9
Replacement Parts/Accessories 10
Accessories Information 11
Bed Rails 11
Electrical 12
Repair or Service Information 12
Servicing of Double-Insulated Products 12
Radio Frequency Interference 13
Weight Limitations 13

SECTION 2—OPERATION AND ADJUSTMENT **14**

Raising and Lowering the Entire Bed 14
Adjusting Universal Bed End Height 14
Using the Pendant 16

SECTION 3—TROUBLESHOOTING **17**

Troubleshooting Electrical 17
Troubleshooting Mechanical 17
Maintenance Checklist 17
Cleaning and Disinfecting the Bed 18

ASSEMBLY, MAINTENANCE AND ADJUSTMENT SECTIONS - FOR DEALERS ONLY **19**

Overview of Procedures 19

SECTION 4—PACKAGING, HANDLING, AND SET-UP **20**

Receiving 20
Unpacking 20
Inspecting 21
Set-Up 22
Storing the Beds 29
Store the bed in a dry area. 29

TABLE OF CONTENTS

SECTION 5—MAINTENANCE AND CLEANING 30

Troubleshooting Electrical.....30

Troubleshooting Mechanical.....30

Maintenance Checklist.....31

Cleaning and Disinfecting the Bed.....31

Pass/Fail.....31

LIMITED WARRANTY 32

SPECIAL NOTES

Signal words are used in this manual and apply to hazards or unsafe practices which could result in personal injury or property damage. Refer to the table below for definitions of the signal words.

SIGNAL WORD	MEANING
DANGER	Danger indicates an imminently hazardous situation which, if not avoided, will result in death or serious injury.
WARNING	Warning indicates a potentially hazardous situation which, if not avoided, could result in death or serious injury.
CAUTION	Caution indicates a potentially hazardous situation which, if not avoided, may result in property damage.

NOTICE

THE INFORMATION CONTAINED IN THIS DOCUMENT IS SUBJECT TO CHANGE WITHOUT NOTICE.

PENDANT OPERATION

A safety feature of this product includes protection against overheating caused by excessive or extended periods of operation. Depending on the duration, this includes multiple or repeated adjustments or the use of multiple functions at one time. To ensure trouble free operation, always allow a slight pause between multiple adjustments and avoid pressing more than one function button at a time. If thermal protection activation should occur, the bed will not respond to pendant commands. Given this situation, release the pendant button and allow the bed unit to sit for several minutes. This will allow the protection function time to reset and restore bed function. Depending on severity of the initial overheating, this could take up to 30 minutes.

LABEL LOCATIONS

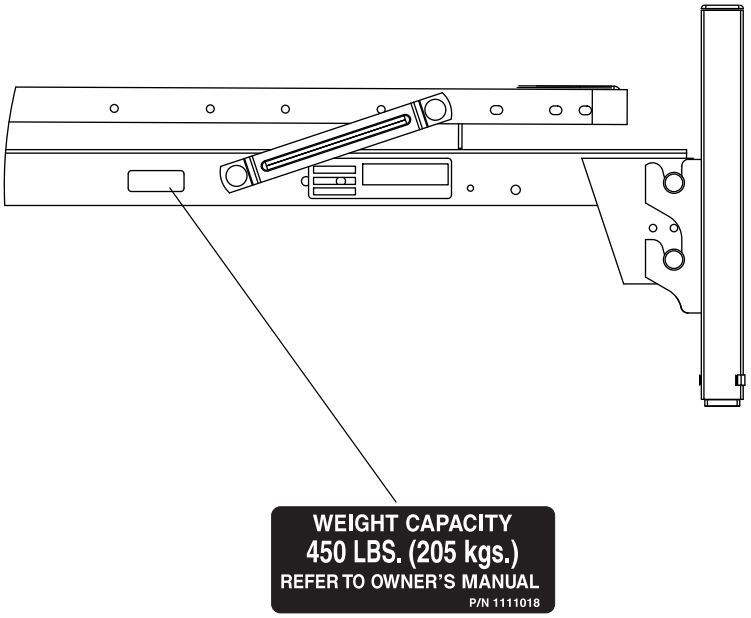

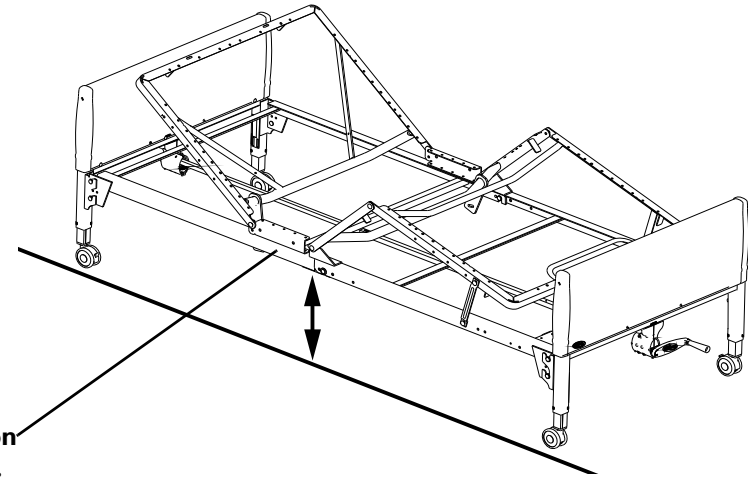

Serial Number is located on the side of the bed frame.

TYPICAL PRODUCT PARAMETERS

ELECTRIC SPLIT SPRING BED SYSTEM

BED NO.	DESCRIPTION	SHIPPING WEIGHT
VC5310 (Single Motor Bed)	Semi Electric Bed with universal bed ends	153 lb (69.4 kg)
VC5210 (Single Motor Bed)	Semi Electric Bed with telescoping bed ends	141 lb (64.0 kg)

SPECIFICATIONS

	VALUECARE BED VC5310	VALUECARE DUO BED VC5210
BED END HEIGHT *WITH CASTERS* MINIMUM: MAXIMUM: *WITHOUT CASTERS* MINIMUM: MAXIMUM:	 29.33 in (74.5 cm) 37.33 in (94.8 cm) 26.00 in (66.0 cm) 34.00 in (86.4 cm)	 29.53 in (75.0 cm) 34.53 in (87.7 cm) 26.20 in (66.5 cm) 31.20 in (79.2 cm)
FABRIC HEIGHT* *WITH CASTERS* MINIMUM: MAXIMUM: *WITHOUT CASTERS* MINIMUM: MAXIMUM:	 18.33 in (46.6 cm) 26.33 in (66.9 cm) 15.00 in (38.1 cm) 23.00 in (58.4 cm)	 18.33 in (46.6 cm) 23.33 in (59.3 cm) 15.00 in (38.1 cm) 20.00 in (50.8 cm)
OVERALL LENGTH:	88 in (223.5 cm)	88 in (223.5 cm)
BED WIDTH:	36 in (91.4 cm)	36 in (91.4 cm)
SPLIT SPRINGS TO ENDS HEAD: FOOT:	 43 in (109.2 cm) 45 in (114.3 cm)	 43 in (109.2 cm) 45 in (114.3 cm)
ELECTRICAL RATING:	VC5310 - 120V 50/60 Hz, 1.0A	VC5210 - 120V 50/60 Hz, 1.0A
WEIGHT CAPACITY:	450 lbs (204 kg.)	450 lbs (204 kg.)

**NOTE: Height from floor to bottom of mattress.*

SECTION 1—GENERAL GUIDELINES

⚠ WARNING

SECTION 1 - GENERAL GUIDELINES contains important information for the safe operation and use of this product.

Important Safety Instructions

When using the bed, basic precautions should always be followed, including the following:

Read all the instructions before using the bed.

DANGER - To reduce the risk of electric shock:

1. **Always unplug the bed from the electrical outlet before cleaning.**

WARNING - To reduce the risk of burns, fire, electric shock, or injury to persons:

1. **Unplug from the outlet before servicing.**
2. **Close supervision is necessary when the bed is used by, or near children and/or disabled persons.**
3. **Use this bed only for its intended use as described in these instructions. DO NOT use attachments not recommended by the manufacturer.**
4. **NEVER operate this bed if it has a damaged cord or plug, if it is not working properly, if it has been dropped, damaged, or dropped into water. Return the bed to a service center for examination and repair.**
5. **Keep the cord away from heated surfaces.**
6. **DO NOT use outdoors.**
7. **Use masked or nasal type oxygen administering equipment only in conjunction with this bed. The use of ANY other type of oxygen administering equipment can result in a fire hazard.**
8. **Use caution when disconnecting the pendant. DO NOT press pendant buttons.**
9. **Risk of injury to persons - DO NOT place video equipment such as televisions or computer monitors on bed.**

SAVE THESE INSTRUCTIONS

Operating Information

DO NOT use near explosive gases.

Keep the product a minimum of 12 inches away from any direct heat source.

Possible fire hazard when used with oxygen administering equipment other than nasal or masked type.

Check all parts for shipping damage and test before using. In case of damage, DO NOT use. Contact a qualified technician for further instruction.

After any adjustments, repair or service and before use, make sure all attaching hardware is tightened securely.

The electric bed may be equipped with locking casters. When transferring into or out of the electric bed, always lock the locking caster(s). Inspect for correct locking action on caster locks before using bed. Even with casters properly locked, some flooring surfaces such as tile or wood, will allow the bed to move under some conditions. Use on surfaces such as these must be evaluated by the care provider. If bed is equipped with caster locks, ALWAYS use caster locks except when moving the bed.

DO NOT let any individual underneath the bed or in between the raised bed frame components at anytime.

When bed is not to be used for an extended period, unplug electric bed from the wall outlet.

The bed is not designed to be used as a patient transport. When transporting a patient, use an approved patient transport. Otherwise, injury or damage may result.

After the bed has been assembled, always test to make sure that all sections of the bed are properly and securely in place before using.

Make sure head and foot springs/sections are connected securely to the universal bed ends before use.

If the unit is not working properly, call a qualified technician to examine the unit and repair it.

⚠ ENTRAPMENT WARNING

Proper patient assessment and monitoring, and proper maintenance and use of equipment is required to reduce the risk of entrapment. Variations in bed rail dimensions, and mattress thickness, size or density could increase the risk of entrapment. Visit the FDA website at http://www.fda.gov to learn about the risks of entrapment. Review "A Guide to Bed Safety", published by the Hospital Bed Safety Workgroup, located at www.invacare.com. Use the link located under each bed rail product entry to access this bed safety guide.

After any adjustments, repair or service and before use, make sure all attaching hardware is tightened securely. Assist rails with dimensions different from the original equipment supplied or specified by the bed manufacturer may not be interchangeable and may result in entrapment or other injury.

Mattress MUST fit bed frame and assist rails snugly to reduce the risk of entrapment.

Replacement Parts/Accessories

When using nasal or masked type oxygen administering equipment, the oxygen or air tubing MUST be routed and secured properly to ensure that the tubing does not become entangled and/or severed during normal operation of the bed.

Always test to make sure that the side rails are properly and securely in place before using the electric bed.

Invacare recommends that the mattress be centered on the bed frame. Otherwise, individuals may become entangled between the bed rail and the bed frame.

Physically challenged individuals who cannot prevent themselves from rolling/climbing out of the this bed may require alternative safe means of restraint.

After raising/lowering the head/foot end of the electric bed, check the distance between the bottom of the bed rail and the mattress. If there is excessive distance between the bottom of the bed rail and the mattress in which individuals may become entangled, adjust the height of the bed rail (if applicable), or provide alternative means of patient protection.

DO NOT use the side rails as push handles for moving the electric bed.

Trapeze units are to be used only for immobilizing a patient in various traction setups or assisting the patient in repositioning or transferring into or out of bed.

NEVER allow patients to use trapeze or traction units as a total individual weight support.

When operating this bed, ALWAYS ensure that the individual utilizing the bed is positioned properly within the confines of the bed. DO NOT let any extremities protrude over the side or between the bed rails when performing these functions.

Keep all moving parts, including the main frame, mattress deck (head and foot springs/sections) and all drive shafts free of obstruction (i.e. blankets/sheets, heating blankets/pads, tubing, wiring, etc. and other types of products using electric cords which may get tangled around the bed, side rails or legs) during operation of the bed.

Replacement mattresses and bed side rails with dimensions different than the original equipment supplied or specified by the bed frame manufacturer are not interchangeable. Variations in bed side rail design, width and thickness or firmness of the mattress could cause/contribute to entrapment. Use only authorized Invacare replacement parts and/or accessories otherwise the warranty is void. Invacare will not be responsible for any damage or injury that may result.

Accessories Information

Invacare products are specifically designed and manufactured for use in conjunction with Invacare accessories. Accessories designed by other manufacturers have not been tested by Invacare and are not recommended for use with Invacare products.

Bed Rails

These bed rails are intended to prevent an individual from inadvertently rolling out of bed. DO NOT use for restraint purposes.

Although bed rails are not rated to any specific weight limitation, the bed rails may become deformed or broken if excessive side pressure is exerted on the bed rails. This bed rail is not an assist rail for getting into or out of bed. DO NOT use the bed rails as push handles when moving the bed.

After any adjustments, repair or service and before use, make sure all attaching hardware is tightened securely. Bed rails with dimensions different from the original equipment supplied or specified by the bed manufacturer may not be inter-changeable and may result in entrapment or other injury.

To reduce the risk of entrapment make certain that the bed rail crossbraces DO NOT exceed the width of the mattress. Mattress MUST fit bed frame and side rails snugly to reduce the risk of entrapment.

Electrical

⚠ DANGER

When using an extension cord, use only a three wire extension cord having at least 16 AWG (American Wire Gauge) wire and the same or higher electrical rating as the device being connected. Use of improper extension cord could result in a risk of fire and electric shock. Three prong to two prong adapters should not be used. Use of three prong adapters can result in improper grounding and present a shock hazard to the user.

DO NOT unplug power cord from motor housing.

If a liquid is spilled in or around the electric bed, unplug the electric bed before cleaning. Clean up the spill and allow the electric bed or the area around the electric bed to dry thoroughly before using the electric controls again.

The pendant and power cords MUST be routed and secured properly to ensure that the cords DO NOT become entangled, pinched and/or severed during operation of the electric bed. Otherwise, damage or injury may result.

NEVER operate if the unit has a damaged cord or plug. If it is not working properly, call a qualified technician for examination and repair.

Keep all electrical cords away from heated or hot surfaces.

Refer servicing to qualified personnel only. Grounding reliability depends upon a properly grounded wall outlet.

Repair or Service Information

DO NOT open assemblies such as the motor, pendant, or gear boxes. No user serviceable parts are inside. Only qualified technicians are permitted to repair these parts. If unqualified individuals perform any work on these beds, the warranty is void.

Unplug the power cord from its power source before performing any maintenance on the bed.

Servicing of Double-Insulated Products

In a double-insulated product, two systems of insulation are provided instead of grounding. No grounding means is provided on a double-insulated product, nor is a means for grounding to be added to the product. Servicing a double-insulated product requires extreme care and knowledge of the system, and is to be done only by qualified service personnel. Replacement parts for a double-insulated product MUST be identical to the parts they replace. A double-insulated product is marked with the words "DOUBLE INSULATION" or "DOUBLE INSULATED". The symbol (⧈) is also able to be marked on the product.

Radio Frequency Interference

Electronic equipment may be influenced by Radio Frequency Interference (RFI). Caution should be exercised with regard to the use of portable communications equipment in the area around such equipment. If RFI causes erratic behavior, unplug the electric bed immediately. Leave unplugged while transmission is in progress.

Weight Limitations

The total weight limit of this 36-inch (91.4 cm) wide bed (including accessories, mattress, occupant and any other person/object positioned on the bed) is 450 pounds (204 kgs); 350 pounds (158 kg) patient weight.

DO NOT permit more than one person on/in the bed at any time.

Body weight should be evenly distributed over the surface of the bed. DO NOT lay, sit or lean in such a way that your entire body weight is placed only on raised head or foot sections of the bed. This includes when repositioning or transferring in or out of bed.

SECTION 2—OPERATION AND ADJUSTMENT

Raising and Lowering the Entire Bed

Universal Bed Ends

ValueCare Bed - Model VC5310

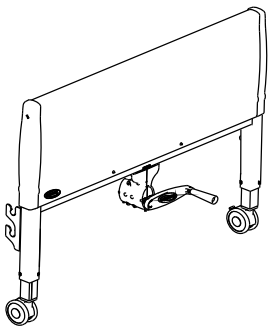

Telescoping Bed Ends

ValueCare Duo Bed - Model VC5210

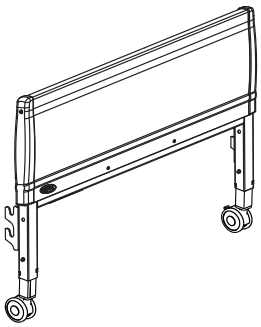

The bed ends must be adjusted to raise or lower the entire bed. Refer to one of the following procedures:

- ValueCare Bed (Model VC5310) - Universal Bed Ends - The crank must be used to raise and lower the bed. Refer to Adjusting Universal Bed End Height on page 14.
- ValueCare Duo Bed (Model VC5210) - Telescoping Bed Ends - The bed ends must be removed from the bed frame to be adjusted. This procedure MUST be performed by a qualified technician. Refer to Adjusting Telescoping Bed End Height on page 26.

Adjusting Universal Bed End Height

NOTE: For this procedure, refer to FIGURE 2.1.

NOTE: This procedure applies to the universal bed ends on the ValueCare Bed (Model VC5310) only.

1. Pinch ears on the input drive shaft cover to open the cover.
2. Flip the input drive shaft cover up and push until it attaches to the gear box. The cross pins will now be accessible.
3. Connect the manual crank to the cross pins until the spring engages the cross pins.
4. Unfold the handle on the hand crank.
5. Turn the hand crank to raise or lower the bed.

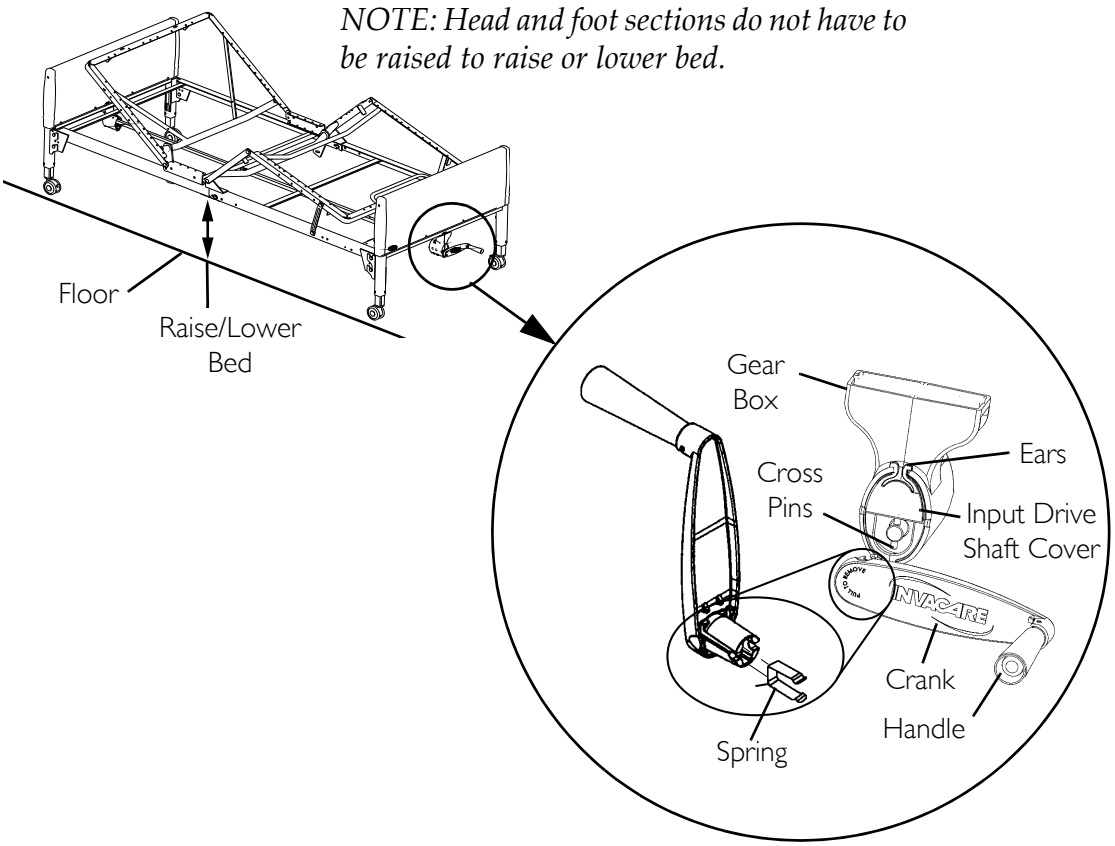

FIGURE 2.1 Adjusting Universal Bed End Height

Using the Pendant

NOTE: For this procedure, refer to FIGURE 2.2.

NOTE: This bed uses a four function pendant for head and foot spring functions.

1. With the bed unoccupied, operate the bed through all phases of its operation as shown in FIGURE 2.2.
2. If any problems arise during test, recheck all electrical connections and mechanical hook-ups.
3. Repeat STEP 1. If the bed still does not function, contact a qualified technician or Invacare Customer Service.

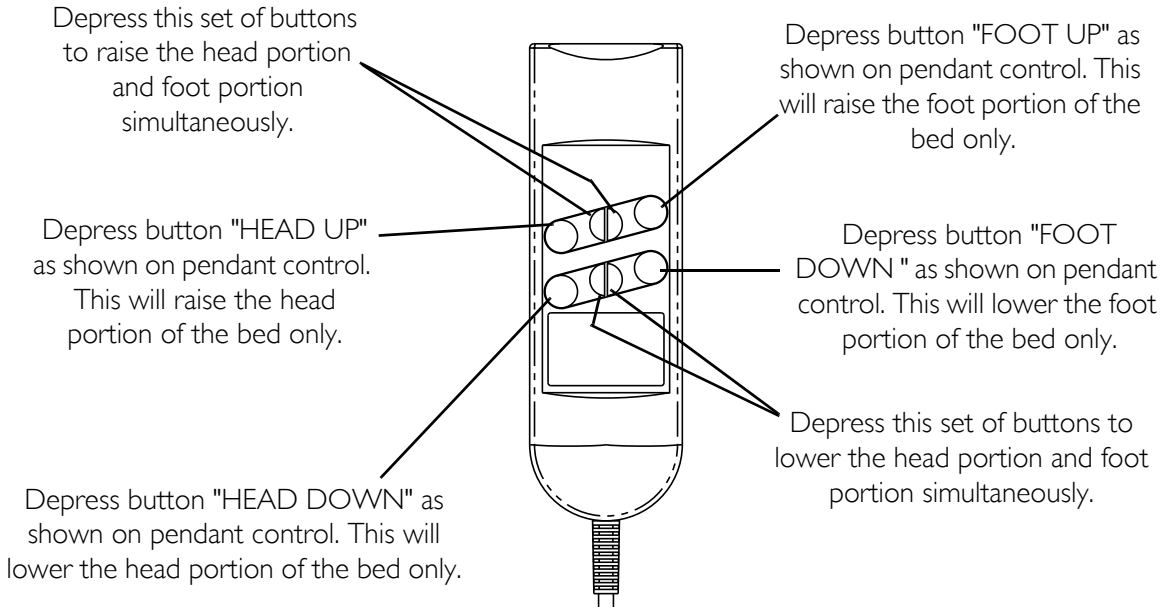

FIGURE 2.2 Using the Pendant

SECTION 3—TROUBLESHOOTING

Troubleshooting Electrical

SYMPTOM	PROBABLE CAUSE	SOLUTIONS
Bed spring does not move.	End of stroke reached.	Operate opposite button.
Bed spring does not stop moving.	Pendant.	Check for depressed/stuck buttons. If button is stuck, call dealer for repair.
Bed is producing unusual sounds, burning odors, or movement deviations observed in the controls, motors, or the limits switch functions.		Call dealer.

Troubleshooting Mechanical

SYMPTOM	PROBABLE CAUSE	SOLUTIONS
Bed does not stay in place.	Locking Casters.	Lock Casters.
Bed springs do not move.	Pull tube.	Check pull tube(s) for binding. Call dealer for repairs.

⚠ WARNING

Read all general guidelines, warnings and cautions before performing any repair/maintenance on the bed. All repair and maintenance on the bed should be performed by a qualified technician.

Maintenance Checklist

Invacare recommends the following maintenance and cleaning procedures be conducted between users and at least once every three years. This form is provided as a guide to help with documentation.

Mechanical Inspection and Maintenance

- ❑ Inspect all bed components for damage or excessive wear.
- ❑ Visually examine all welds for cracks.
- ❑ Inspect the head and foot springs for bending, warping or damage.
- ❑ Inspect mounting hardware for bending, damage or excessive wear.

- ❑ Inspect all bolts and rivets to ensure that they are securely tightened and functioning properly.
- ❑ Check sleep surfaces to ensure all links are intact.
- ❑ Inspect bed height adjustment pin for excessive wear.
- ❑ Ensure that casters are free of debris.
- ❑ Check that all labels are present and legible. Replace if necessary.

Electrical Inspection and Maintenance

- ❑ Check pendant, power and motor cords for chafing, cuts or excessive wear.
- ❑ Make sure all plugs are fully attached and free of damage.
- ❑ Check all functions:
  - Head raises and lowers properly.
  - Foot raises and lowers properly.
  - Bed Ends raise and lower properly.

Cleaning and Disinfecting the Bed

- ❑ Unplug the power cord of electric beds before performing maintenance.
- ❑ Wipe down with disinfectant. Allow to dry completely.

ASSEMBLY, MAINTENANCE AND ADJUSTMENT SECTIONS - FOR DEALERS ONLY

⚠ WARNING

The procedures in the following sections MUST be performed by a qualified technician.

Overview of Procedures

Receiving

Unpacking

Inspecting

Set-Up

- ❑ Assembling the Head and Foot Spring Sections
- ❑ Assembling the Spring Fabric
- ❑ Installing the Motors
- ❑ Installing the Battery for Emergency Operation
- ❑ ValueCare Duo Bed (VC5210) Only - Adjusting the Telescoping Bed End Height
- ❑ Installing the Optional Casters
- ❑ Installing the Bed Ends
- ❑ ValueCare Bed (VC5310) Only - Assembling and Installing the Drive Shaft

Storing the Beds

SECTION 4—PACKAGING, HANDLING, AND SET-UP

Receiving

1. Count cartons before signing shipping papers.
2. Designate someone at the facility to receive and inspect all merchandise. Use the master order acknowledgment to check off items as they are received.
3. Compare the number of cartons shipped with the number of cartons actually received and note such on the consignee copy of the freight bill. Make sure to have the truck driver sign the copy acknowledging the count.
4. If shortage occurs, IMMEDIATELY contact Invacare Customer Service Department.

Unpacking

⚠ WARNING

DO NOT plug the power cord into a power source until assembly is complete. To do so could result in damage or personal injury.

DO NOT attempt to operate bed controls prior to completion of assembly otherwise damage to bed components may occur.

NOTE: For this procedure, refer to FIGURE 4.1 on page 21.

1. Remove any loose packing from the cartons.
2. Carefully remove all components from the cartons:
   - Foot Spring carton includes:
     - One foot spring section, pendant, motor and cord.
   - Head Spring carton includes:
     - One head spring section.
   - Bed End carton includes:
     - Two bed ends.
     - One drive shaft - ValueCare Bed (VC5310) only.
     - Casters (Optional) - two locking, two non locking.
     - Hand crank - ValueCare Bed (VC5310) only.

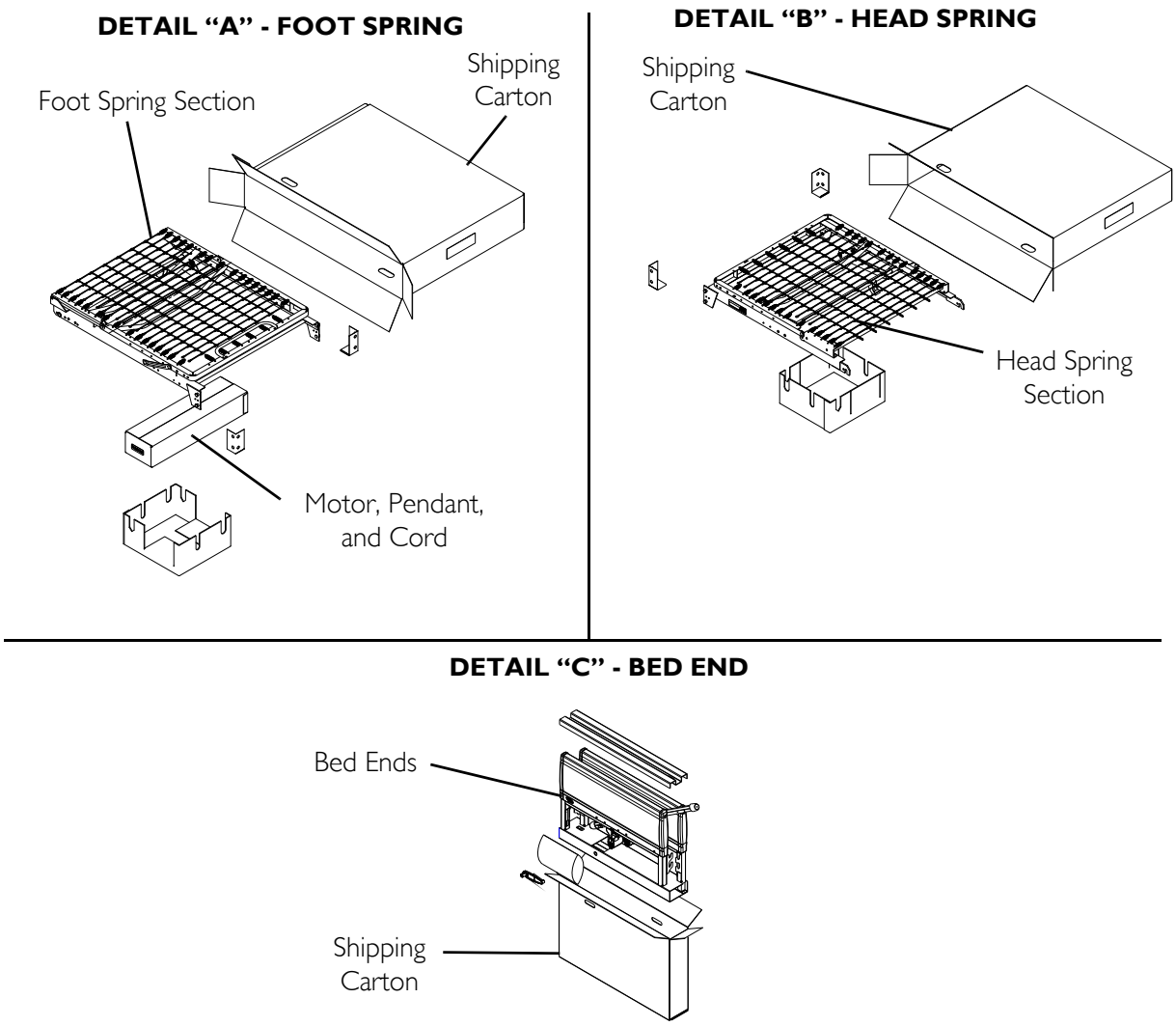

FIGURE 4.1 Unpacking

Inspecting

1. Examine each item carefully for scratches, nicks, dents or any other apparent damage.

NOTE: Check all parts for shipping damage. In case of shipping damage, DO NOT use. Contact Dealer/Carrier for further instruction.

2. Inspect the power supply cord and cables for cuts or damage to the cord or plug.

Set-Up

Assembling the Head and Foot Spring Sections

⚠ WARNING

DO NOT attempt to operate bed controls prior to completion of assembly as damage to bed components or personal injury may occur.

NOTE: For this procedure, refer to FIGURE 4.2 on page 23.

1. Place the head spring section on its side so the center mounting latches are as shown in Detail "A".
2. Open the head spring section to a 45° to 90° angle to support the spring section.
3. Place the foot spring section on its side so the center mounting rivets are as shown in Detail "A".
4. Place the head and foot springs approximately 90° from each other.
5. Hook the bottom head spring center mounting latch to the bottom center mounting rivet. Refer to Detail "B".
6. Hook the top head spring center mounting latch to the top center mounting rivet.

NOTE: It may be necessary to lift the head spring or foot spring slightly to secure the mounting latches and rivets.

7. After head and foot springs are connected, pull the springs into a horizontal (straight) position while keeping the springs on their sides.

Assembling the Spring Fabric

NOTE: For this procedure, refer to FIGURE 4.2 on page 23.

1. Lift the head spring away from the bed frame to give slack to the fabric (Detail "C").
2. Connect the spring fabric together with the links provided (Detail "C").

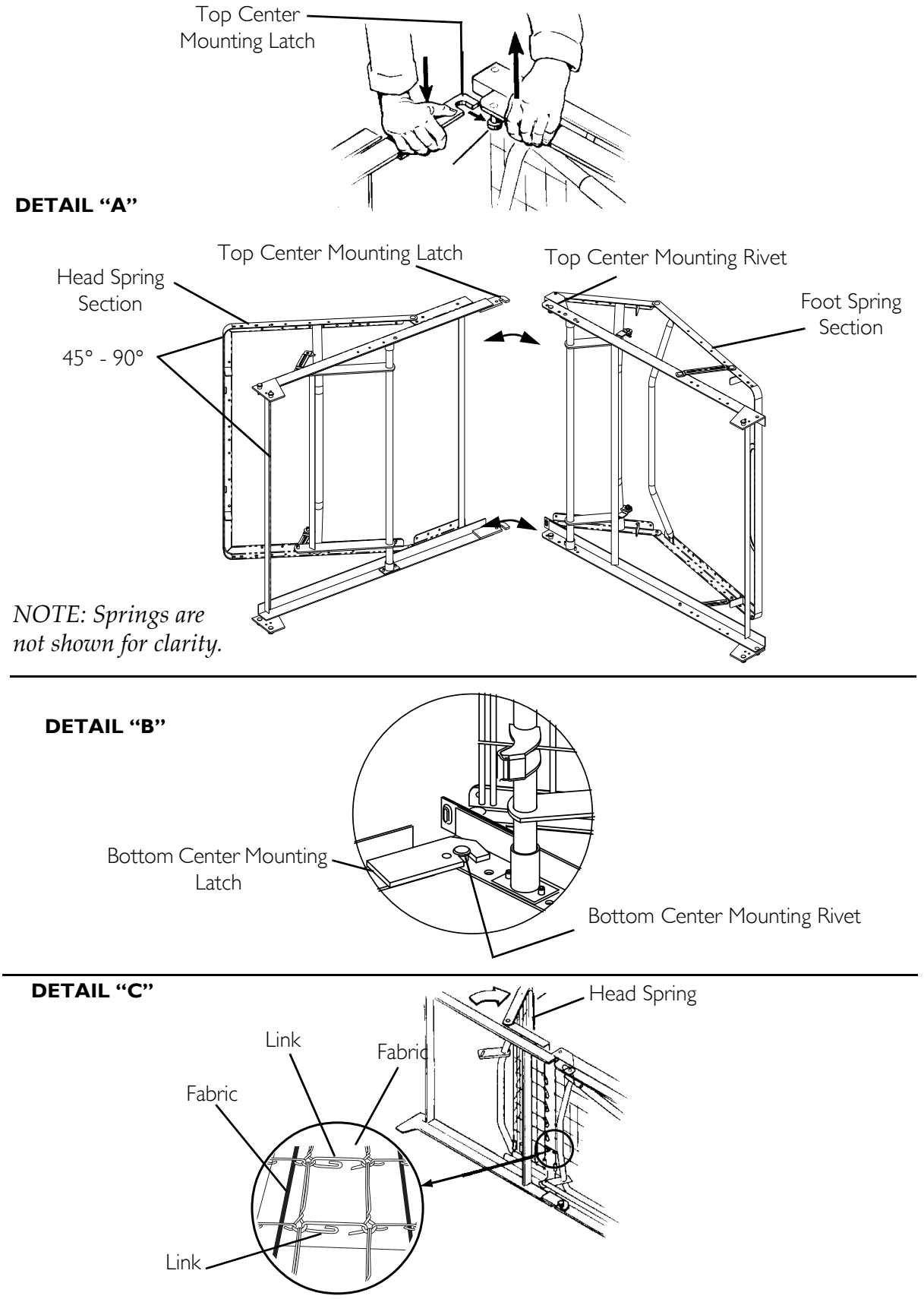

FIGURE 4.2 Assembling the Head and Foot Spring Sections

Installing the Motor

⚠ WARNING

Ensure motor assembly is properly oriented before installing. The motor has one end that operates the head section and one end that operates the foot section. If the motor is installed in the wrong direction, then the pendant functions will operate the reverse feature. This will possibly result in injury to the user.

NOTE: For this procedure, refer to FIGURE 4.3.

1. Align the motor assembly over the cams (Detail "A").

NOTE: If necessary, use a rubber mallet to tap the motor into position.

2. Snap the motor assembly onto the cams (Detail "B").
3. Place the bed frame flat with the springs facing up.
4. Install slide caps onto motor assembly (Detail "B").

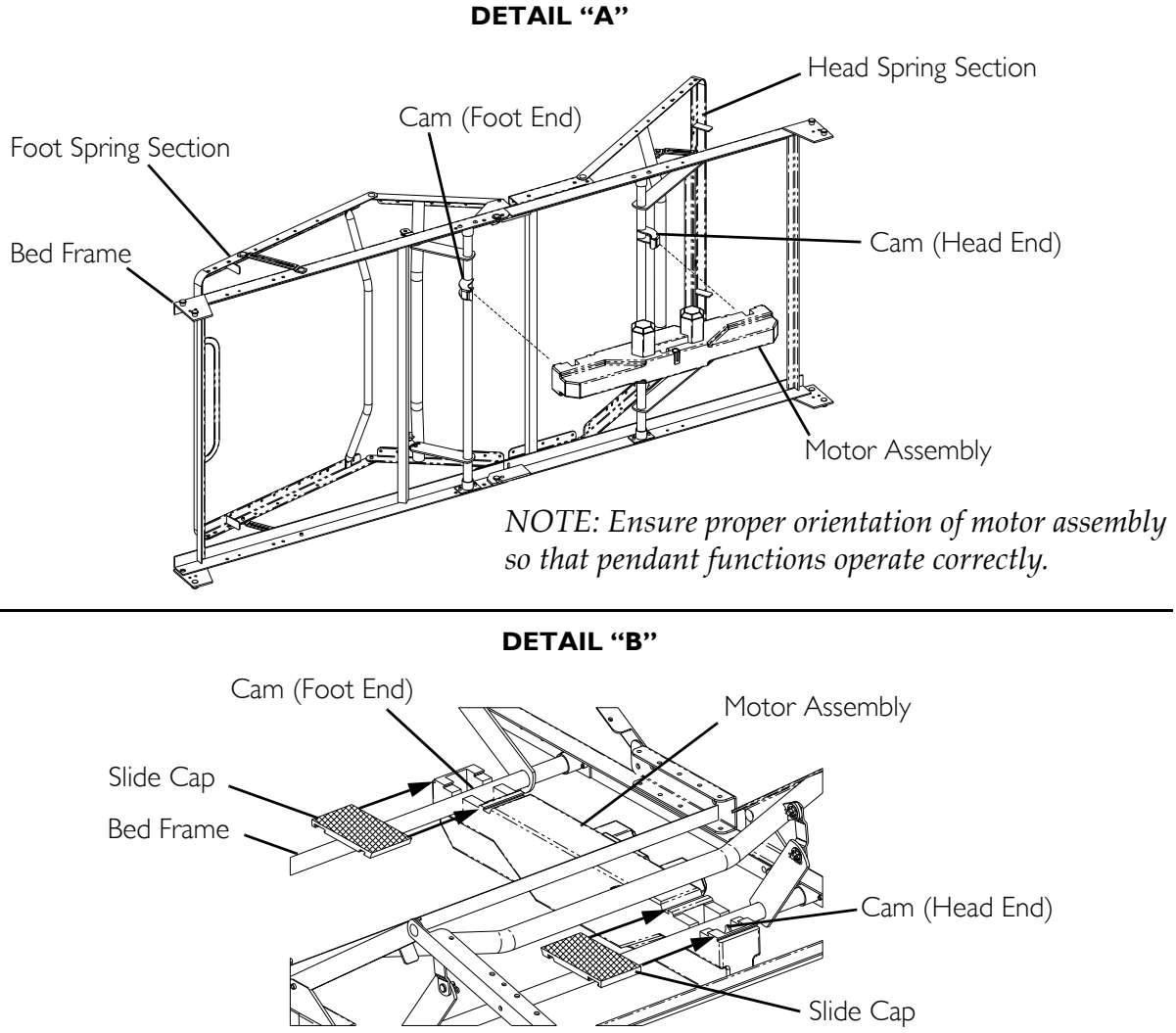

FIGURE 4.3 Installing the Motor

Installing the Battery for Emergency Operation

⚠ WARNING

Battery is to be used for lowering bed only. Battery MUST be replaced after using or at least every twelve months.

NOTE: For this procedure, refer to FIGURE 4.4.

1. Install 9V battery into battery mount location.
2. Connect 9V battery to the connector lead coming out of the motor.

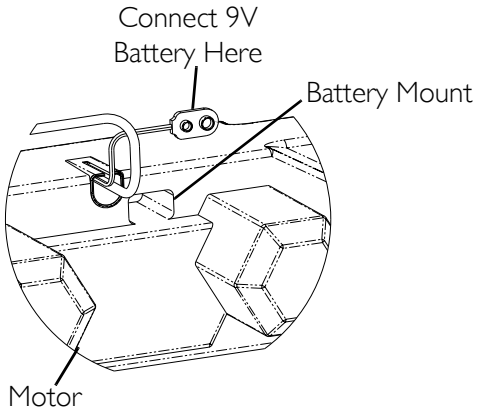

FIGURE 4.4 Installing the Battery for Emergency Operation

Adjusting Telescoping Bed End Height

NOTE: For this procedure, refer to For this procedure, refer to FIGURE 4.5.

⚠ WARNING

Risk of Injury

Pinch points may occur when the snap button engages with the adjustment hole.

If the snap button does not engage fully with the adjustment hole or if the legs are not adjusted to the same adjustment hole, the bed will be unstable and injury may occur.

- Keep fingers out of the adjustment hole when the snap button is engaging.

- Ensure the snap button engages fully with the adjustment hole.

- Ensure all telescoping legs are adjusted to the same adjustment hole.

NOTE: This procedure applies to the telescoping bed ends on the ValueCare Duo Bed (Model VC5210) only.

1. Remove the bed ends. Refer to Installing the Bed Ends on page 28.
2. Depress the snap button on the bed end.
3. Extend or retract the telescoping leg to the desired position.
4. Ensure the snap button fully engages with the adjustment hole.
5. Repeat STEPS 1-3 for the remaining legs.
6. Ensure all legs are adjusted to the same height adjustment position.
7. Install the bed ends. Refer to Installing the Bed Ends on page 28.

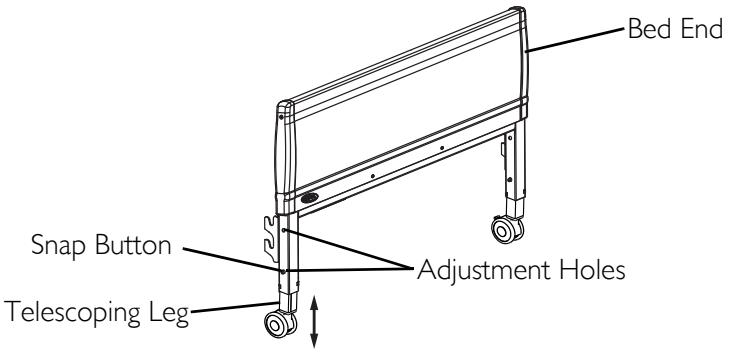

FIGURE 4.5 Installing the Battery for Emergency Operation

Installing the Optional Casters

⚠ WARNING

Ensure that the two locking casters are installed diagonally opposite from each other and are locked. Otherwise, damage or personal injury could occur. Refer to Detail "A" in FIGURE 4.6.

Ensure that casters are locked and that the bed does not move before transferring. DO NOT transfer occupant if bed is not stable.

NOTE: For this procedure, refer to FIGURE 4.6.

NOTE: If optional casters were purchased and two locking casters are not included with the bed, contact a qualified dealer.

1. Install casters by carefully lifting the bed ends approximately five inches (12.7 cm) from the floor and inserting the shaft of caster assembly into the caster socket.
2. To prevent excess movement of the bed, lock both of the locking casters by pushing DOWN on the caster locks.

NOTE: Locking the casters may not prevent the bed from moving on slick or slippery surfaces.

3. Unlock the locking casters by pulling UP on the caster locks.

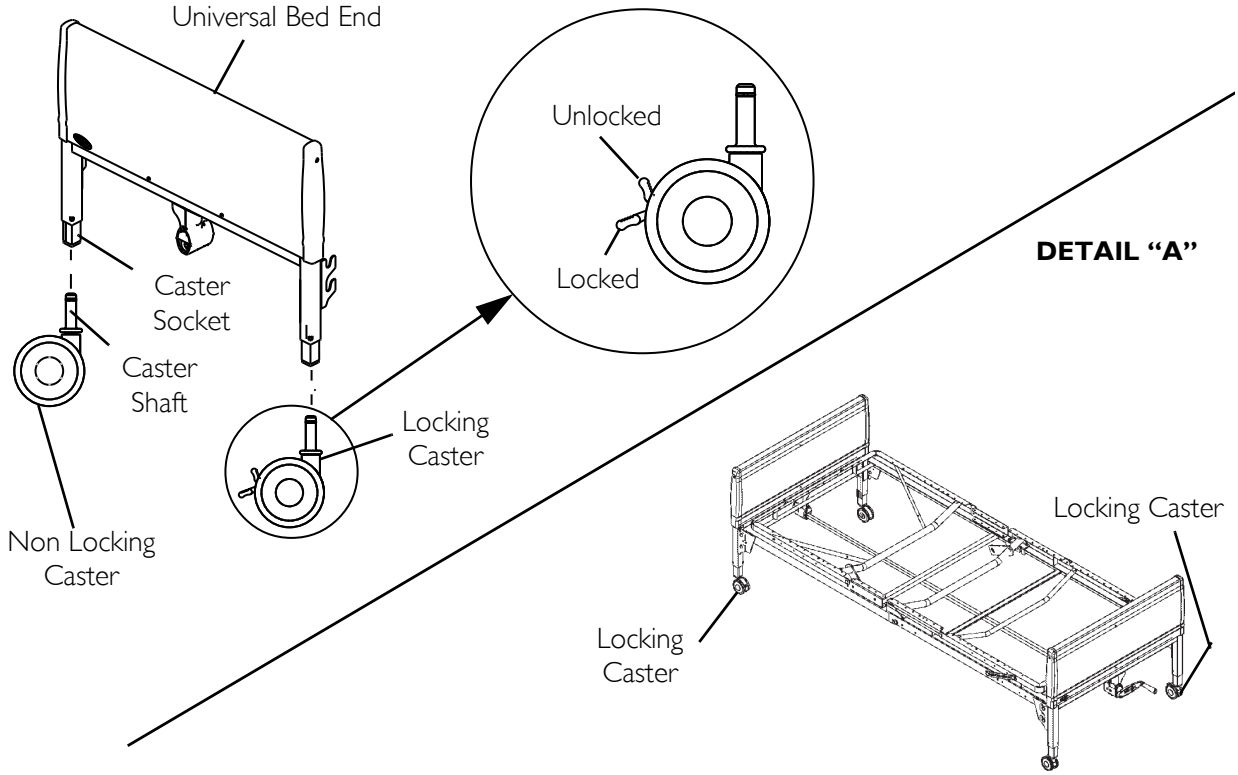

FIGURE 4.6 Installing the Optional Casters

Installing the Bed Ends

NOTE: For this procedure, refer to FIGURE 4.7 on page 28.

NOTE: The bed ends are universal and can be mounted to the head or foot end of the bed.

NOTE: ValueCare Duo Bed (Model VC5210) Only - Adjust the bed end height before installing the bed ends.

1. Stand one bed end as close to the head spring section as possible.
2. With one hand, grasp the head spring section and raise until the rivets on the corner plates are at the correct height to fit into the corner locks on the bed end.

⚠ WARNING

DO NOT place your hand between the head spring section and the bed end while assembling, otherwise injury may occur.

3. Tilt the bed end backward slightly and the rivets should slide into the corner locks more easily.
4. When the bed end is returned to its full upright position, the bed end will lock into place.
5. Repeat STEPS 1-4 to install the remaining bed end to the foot spring section.

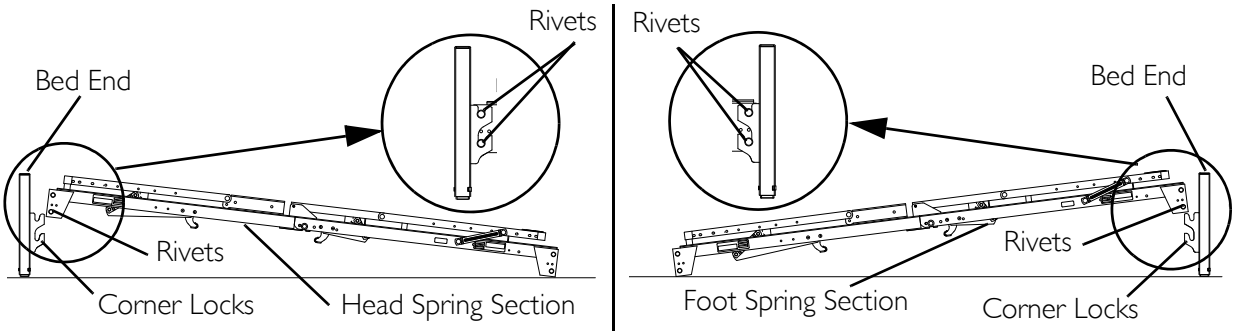

FIGURE 4.7 Installing the Bed Ends

Installing the Drive Shaft Assembly

NOTE: For this procedure, refer to FIGURE 4.8.

NOTE: The following procedure applies to the ValueCare Bed (VC5310) Only.

The drive shaft is composed of two sections. The inner shaft which has a positioning spring button, and the outer shaft, which has two positioning holes and one storage position hole. Together they make the telescoping drive shaft used on all Hi/Lo model beds.

1. Remove the plastic caps from each end of the drive rod.
2. Depress spring button on the inner shaft and insert the inner shaft into the outer shaft.
3. Slide the inner shaft until the spring button engages in the furthermost positioning hole in the outer shaft.
4. Connect the drive shaft to the bed by attaching either end of the drive shaft to the head end gear box.
5. Connect the other end of the drive shaft to the foot end gear box.

NOTE: The drive shaft will mount directly into the foot end gearbox output shaft.

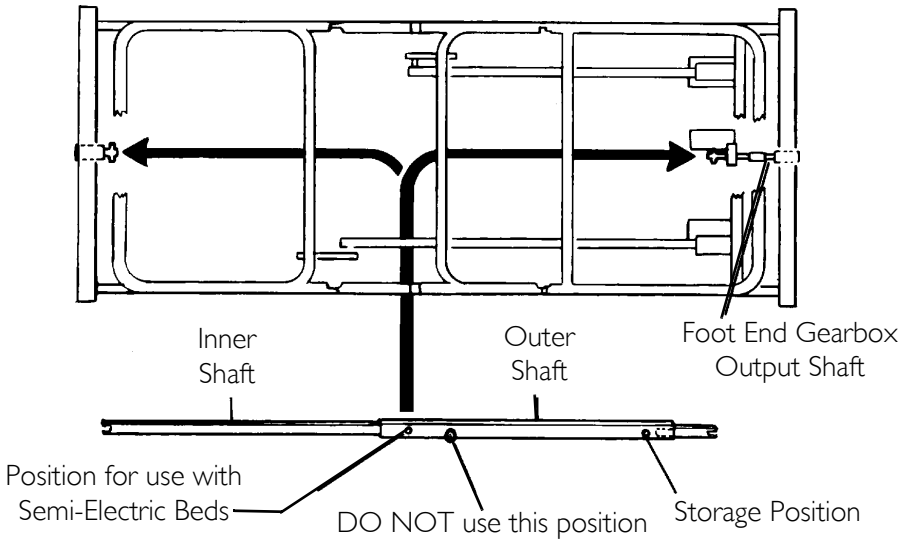

FIGURE 4.8 Installing the Drive Shaft Assembly

Storing the Beds

⚠ WARNING

DO NOT place other objects on top of the cartons.

If bed is not being assembled immediately, retain the cartons and packaging for storage until ready for assembly.

Store the bed in a dry area.

SECTION 5—MAINTENANCE AND CLEANING

Invacare recommends the following maintenance and cleaning procedures be conducted between users or as needed. This form may be copied and used as a procedural guide and documentation.

Date _____Bed Model #_____ Bed Serial # _____

Troubleshooting Electrical

SYMPTOM	PROBABLE CAUSE	SOLUTIONS
Bed spring does not move.	End of stroke reached.	Operate opposite button.
	Bed not plugged in.	Ensure power cord is plugged into power source.
	Pendant not functioning.	Ensure Pendant is correctly connected. Refer to Installing the Drive Shaft Assembly on page 29. Ensure Pendant cable not entangled/pinched.
	Cables	Ensure cables are not entangled/pinched. Call Invacare for repair/replacement of cables and/or motors.
	Thermal Protection Activated.	Allow bed unit to sit for 30 minutes and retry.
Bed Spring does not stop moving.	Pendant.	Replace pendant. Refer to Storing the Beds on page 29.
Bed is producing unusual sounds, burning odors, or movement deviations observed in the controls, motors, or the limits switch functions.		Call Invacare.

Troubleshooting Mechanical

SYMPTOM	PROBABLE CAUSE	SOLUTIONS
Bed does not stay in place.	Locking Casters.	Lock Casters. Refer to Installing the Optional Casters on page 27.
	Dirty Floor	Ensure floors are free of dirt or spills that make floors slippery.
Bed springs move in unintended directions.	Motor installed incorrectly.	Reinstall motor. Refer to Installing the Motor on page 24.

⚠ WARNING

Read all general guidelines, warnings and cautions before performing any repair/maintenance on the bed. All repair and maintenance on the bed should be performed by a qualified technician.

Maintenance Checklist

Invacare recommends the following maintenance and cleaning procedures be conducted between users or as needed. This form is provided as a guide to help with documentation.

Mechanical Inspection and Maintenance

- ❑ Inspect all bed components for damage or excessive wear.
- ❑ Visually examine all welds for cracks.
- ❑ Inspect the head and foot springs for bending, warping or damage.
- ❑ Inspect mounting hardware for bending, damage or excessive wear.
- ❑ Inspect all bolts and rivets to ensure that they are securely tightened and functioning properly.
- ❑ Check sleep surfaces to ensure all links are intact.
- ❑ Check mechanical integrity of motor to bed joint. Periodically lubricate riveted joints using a light weight oil.
- ❑ Inspect bed height adjustment pin for excessive wear.
- ❑ Ensure that casters are free of debris.
- ❑ Check that all labels are present and legible. Replace if necessary.

Electrical Inspection and Maintenance

- ❑ Check pendant, power and motor cords for chafing, cuts or excessive wear.
- ❑ Make sure all plugs are fully attached and free of damage.
- ❑ Check all functions (head and foot sections raise and lower properly).

Cleaning and Disinfecting the Bed

- ❑ Unplug the power cord of electric beds before performing maintenance.
- ❑ Wipe down with disinfectant. Allow to dry completely.

Pass/Fail

- ❑ PASS: Bed and all components have passed all of the preceding inspection criteria and are ready for placement in a client's home.
- ❑ FAIL: Bed or any of its components has failed any of the preceding inspection criteria. Tag the bed or component with a complete description of the failure(s) and have the bed serviced.

LIMITED WARRANTY

PLEASE NOTE: THE WARRANTY BELOW HAS BEEN DRAFTED TO COMPLY WITH FEDERAL LAW APPLICABLE TO PRODUCTS MANUFACTURED AFTER JULY 4, 1975.

This warranty is extended only to the original purchaser who purchases this product when new and unused from Invacare or a dealer. This warranty is not extended to any other person or entity and is not transferable or assignable to any subsequent purchaser or owner. Coverage under this warranty will end upon any such subsequent sale or other transfer of title to any other person.

This warranty gives you specific legal rights and you may also have other legal rights which vary from state to state.

Invacare warrants the mechanical components of this product when purchased new and unused to be free from defects in materials and workmanship for a period of two years from date of purchase from Invacare or a dealer, with a copy of the seller's invoice required for coverage under this warranty. Invacare warrants the electrical components of this product when purchased new and unused to be free from defects in materials and workmanship for a period of two years from date of purchase from Invacare or a dealer, with a copy of the seller's invoice required for coverage under this warranty. Invacare warrants all welds of this product when purchased new and unused to be free from defects in materials and workmanship for a period of five years from date of purchase from Invacare or a dealer, with a copy of the seller's invoice required for coverage under this warranty. If within such warranty periods any such product shall be proven to be defective, such product shall be repaired or replaced, at Invacare's option. This warranty does not include any labor or shipping charges incurred in replacement part installation or repair of any such product. Invacare's sole obligation and your exclusive remedy under this warranty shall be limited to such repair and/or replacement.

For warranty service, please contact the dealer from whom you purchased your Invacare product. In the event you do not receive satisfactory warranty service, please write directly to Invacare at the address on the back cover, provide dealer's name, address, and the date of purchase, indicate nature of the defect and, if the product is serialized, indicate the serial number. Do not return products to our factory without our prior consent.

LIMITATIONS AND EXCLUSIONS: THE FOREGOING WARRANTY SHALL NOT APPLY TO SERIAL NUMBERED PRODUCTS IF THE SERIAL NUMBER HAS BEEN REMOVED OR DEFACED, PRODUCTS SUBJECTED TO NEGLIGENCE, ACCIDENT, IMPROPER OPERATION, MAINTENANCE OR STORAGE, PRODUCTS MODIFIED WITHOUT INVACARE'S EXPRESS WRITTEN CONSENT (INCLUDING, BUT NOT LIMITED TO, MODIFICATION THROUGH THE USE OF UNAUTHORIZED PARTS OR ATTACHMENTS; PRODUCTS DAMAGED BY REASON OF REPAIRS MADE TO ANY COMPONENT WITHOUT THE SPECIFIC CONSENT OF INVACARE, OR TO A PRODUCT DAMAGED BY CIRCUMSTANCES BEYOND INVACARE'S CONTROL, AND SUCH EVALUATION WILL BE SOLELY DETERMINED BY INVACARE. THE WARRANTY SHALL NOT APPLY TO NORMAL WEAR AND TEAR OR FAILURE TO ADHERE TO THE PRODUCT INSTRUCTIONS.

THE FOREGOING EXPRESS WARRANTY IS EXCLUSIVE AND IN LIEU OF ANY OTHER WARRANTIES WHATSOEVER, WHETHER EXPRESS OR IMPLIED, INCLUDING THE IMPLIED WARRANTIES OF MERCHANTABILITY AND FITNESS FOR A PARTICULAR PURPOSE, AND THE SOLE REMEDY FOR VIOLATIONS OF ANY WARRANTY WHATSOEVER, SHALL BE LIMITED TO REPAIR OR REPLACEMENT OF THE DEFECTIVE PRODUCT PURSUANT TO THE TERMS CONTAINED HEREIN. THE APPLICATION OF ANY IMPLIED WARRANTY WHATSOEVER SHALL NOT EXTEND BEYOND THE DURATION OF THE EXPRESS WARRANTY PROVIDED HEREIN. INVACARE SHALL NOT BE LIABLE FOR ANY CONSEQUENTIAL OR INCIDENTAL DAMAGES WHATSOEVER.

SOME STATES DO NOT ALLOW THE EXCLUSION OR LIMITATION OF INCIDENTAL OR CONSEQUENTIAL DAMAGE, OR LIMITATION OF HOW LONG AN IMPLIED WARRANTY LASTS, SO THE ABOVE EXCLUSION AND LIMITATION MAY NOT BE APPLICABLE.

THIS WARRANTY SHALL BE EXTENDED TO COMPLY WITH STATE/PROVINCIAL LAWS AND REQUIREMENTS.

Invacare Corporation www.invacare.com

USA
One Invacare Way
Elyria, Ohio USA
44036-2125
800-668-2337

Yes, you can.®

© 2014 Invacare Corporation. All rights reserved. Republication, duplication or modification in whole or in part is prohibited without prior written permission from Invacare. Trademarks are identified by the symbols ™ and ®. All trademarks are owned by or licensed to Invacare Corporation or its subsidiaries unless otherwise noted.

Making Life's Experiences Possible™

Part No 1134867
Rev D - 03/20/14