COMPANION 5

Figure 3: View of Sieve Bed Assembly and Back case

Item number	Description	Quantity	Bubble Seq No
15062853	Screw, Case	6	1
21127244	Handle Gross Particle Filter	1	2
21127239	Filter Gross Particle Screen	1	3
15063531	Regulator	1	4
20913392S	Valve Assembly	1	5
20912323	ROD, Sieve Bed Assembly	1	6
15063565	Muffler, Exhaust	1	7
20913391S	Sieve Bed Assembly (2016-Present)	1	8
15089714	Tubing, Silcone Check Valve to O2 board port	1	9
15063653	Check Valve Diaphragm	1	10
15089722	Tubing, Silcone Sieve Beds to Check Valve	1	11
15063338	Grommet, Rubber, Top Mount	1	12
20902395	Grommet, Rubber, Bottom Mount	1	13
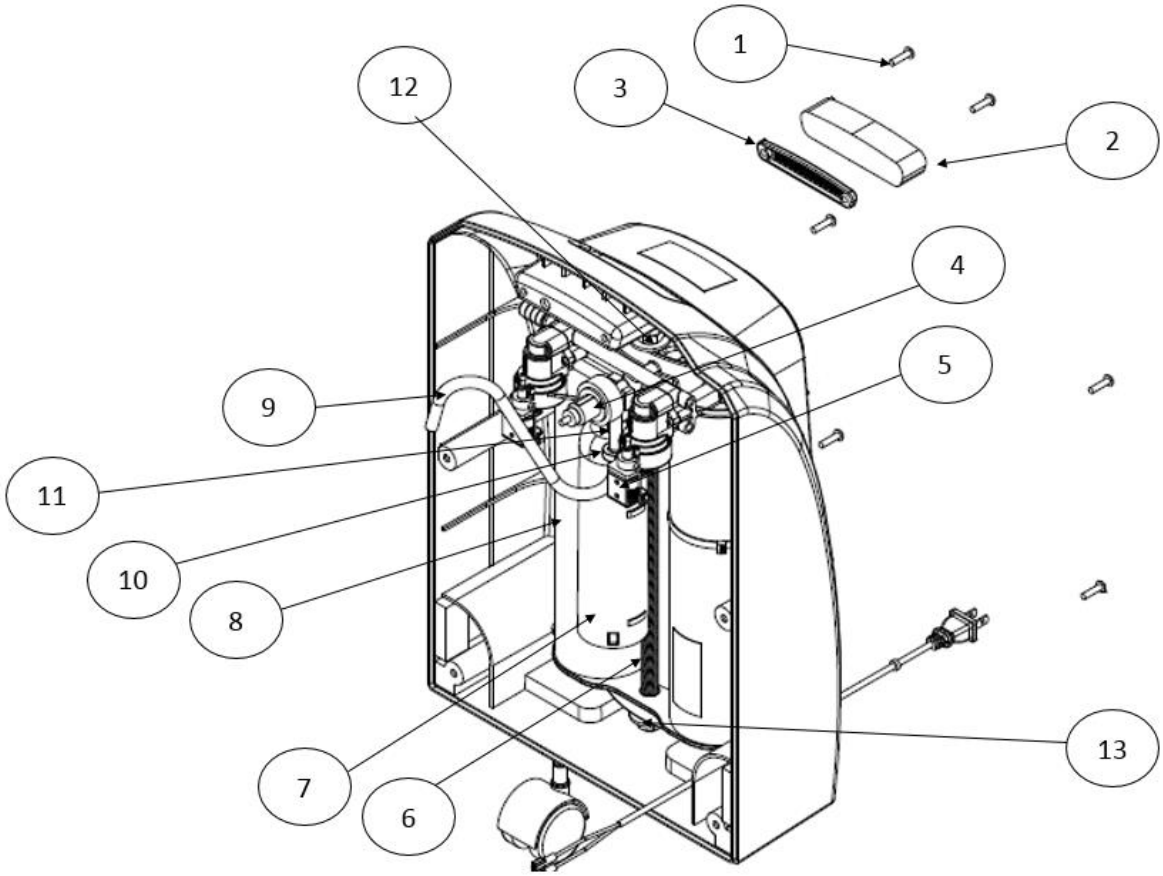
COMPANION 5