Competitor

Ultra Light Plus, Semi Electric Bed

Item # 15560, 15560-HR

Owner's Assembly And Operating Manual

Note: The competitor bed is available with half-rails (not shown).
See page 16 for installation instructions.

Assembly Instructions

1. Remove contents from carton.

2. Place both ends of the sleep surface on their side and align the flange with the receptacle as shown.

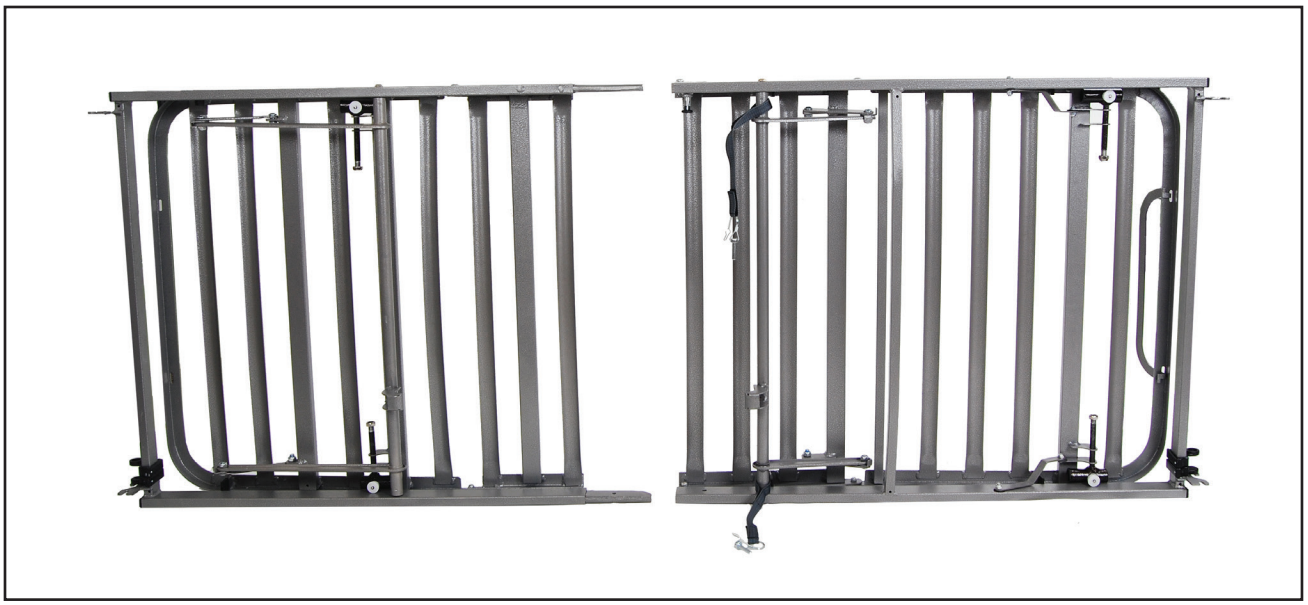

3. To attach the head and foot spring, pull the black knob away for the frame and slide the two sides together. The lock knob is spring loaded and will lock into position when released and the two sections of the bed are flush together.

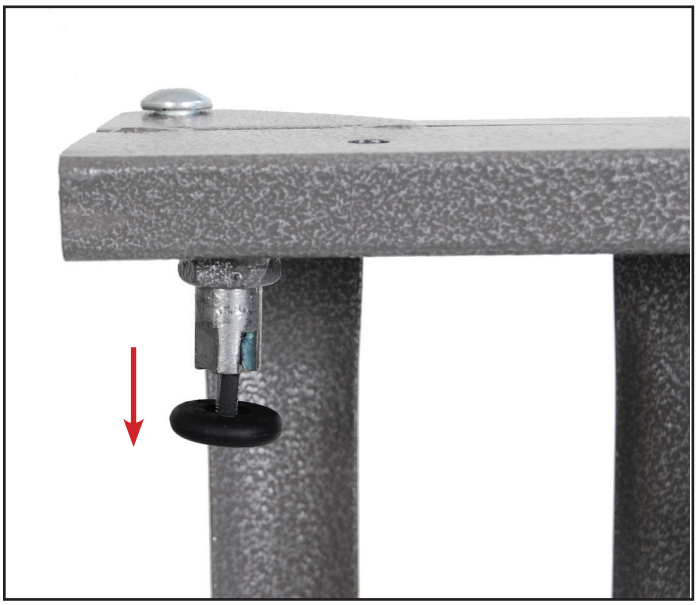

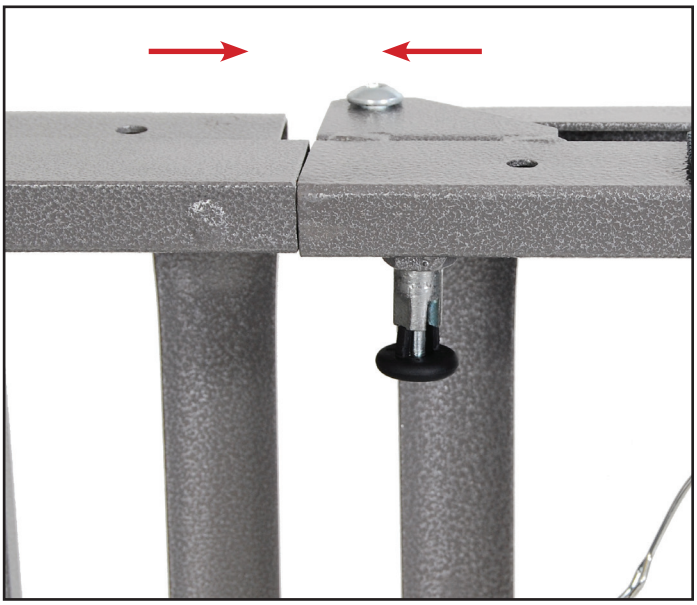

To disassemble the head and foot section, pull the black lock knob out and rotate the knob a quarter turn. The lock knob will remain open to allow the head section to be removed from the foot section.

Assembly Instructions Cont.

4. Secure the sleep surface with the cotter pin as shown.

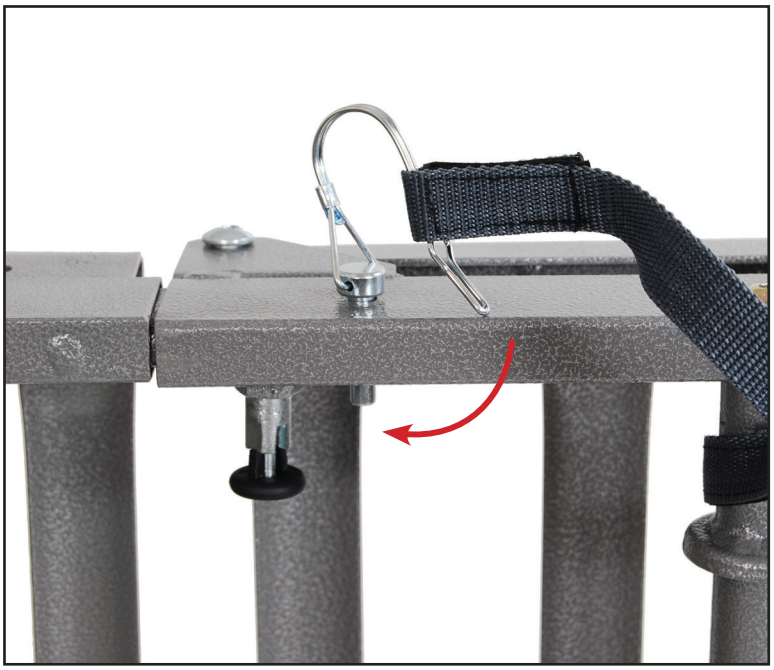

5. Lock the cotter pin with the attached clasp. Repeat on the opposite side.

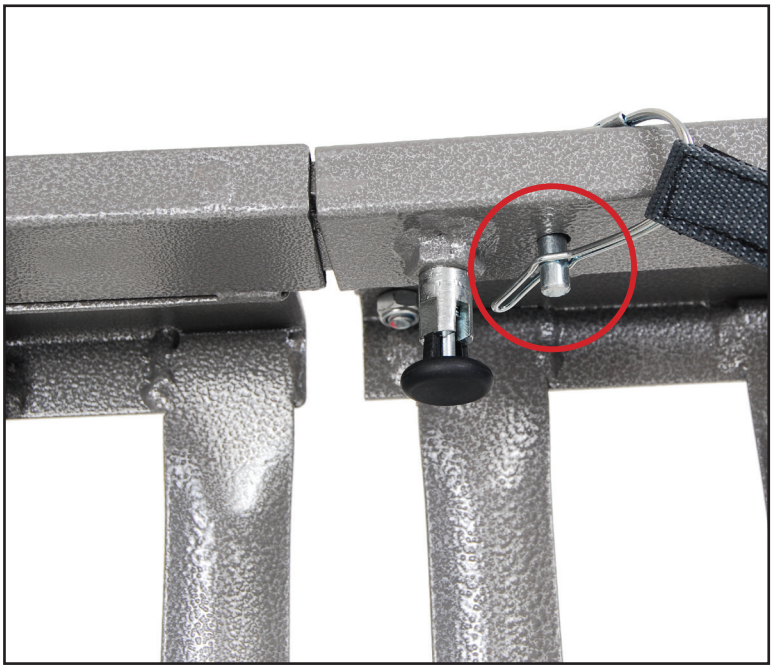

Assembly Instructions Cont.

HAND CONTROL

The Competitor bed comes with a hand control that will illuminate when the bed is plugged into a grounded or polarized wall outlet, or with 9V battery (not included) installed in the hand control. The hand control will illuminate as long as the wall or battery has power. With this battery installed, the motor can be operated to return the sleep surface to the horizontal position in the event of a power failure.

6. NOTE: Before installing motor, plug hand pendant cable into motor as shown

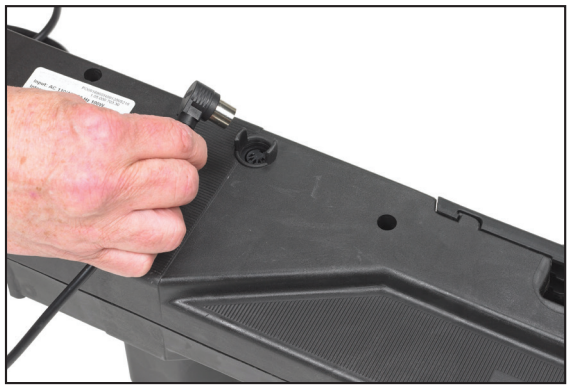

7. To install motor, remove locking caps on top of the motor.

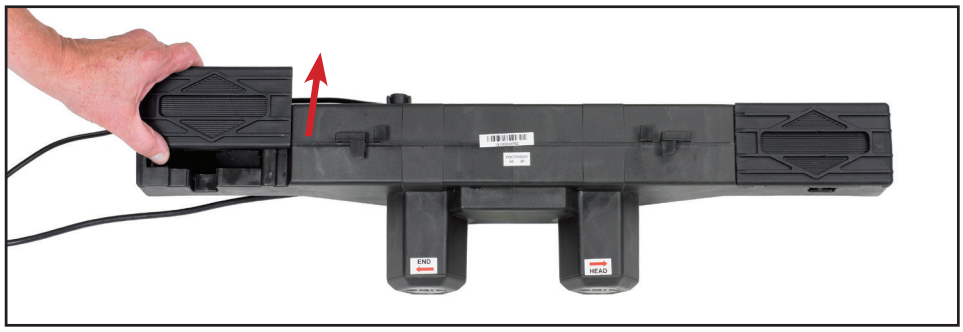

Assembly Instructions Cont.

There are two methods for the installation of the motor

Method A

The motor is installed on the bed frame when the frame is standing on its side.

Installation instructions can be found on pages 7-8.

Method B

The motor is installed from underneath the bed frame (horizontal to the ground)

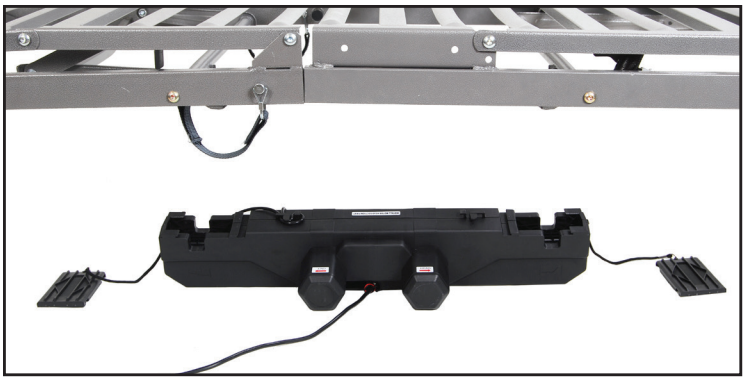

Installation instructions can be found on pages 10-11.

Assembly Instructions Cont.

Method A
Installation of the motor when bed frame is on its side

A1. Prior to installation, make sure that the 2 white motor blocks are in the retracted position.

CORRECT

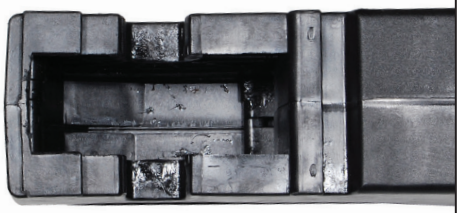

INCORRECT

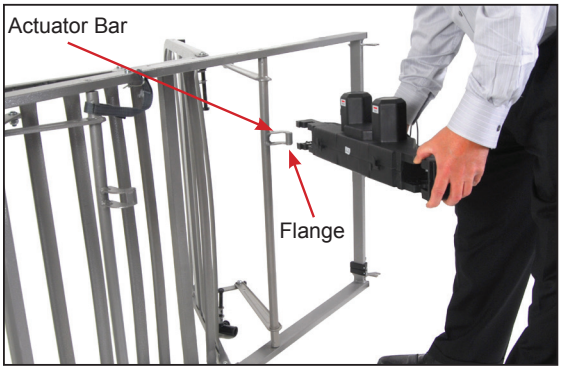

A2. Align the opening on the head end of the motor with the flange on the head section of the bed and insert the flange into the motor compartment.

A3. With the palm of your hand, snap the motor flush to the actuator bar.

A4. Align the opening on the foot end of the motor with the flange on the foot section of the bed and insert the flange into the motor compartment.

A5. With the palm of your hand, snap the motor flush to the actuator bar.

Assembly Instructions Cont.

A6. Once in place, replace the motor covers to secure the motor.

A6. Once the motor is attached, lay bed flat and install head and foot boards. There are 2 height adjustments on the head and foot board. Select the desired positions and hook the frame onto the foot board. Slide lock towards leg of foot board to secure position as shown. Repeat for opposite side.

HEIGHT ADJUSTMENT

9. The Competitor bed deck has two height adjustments.

10. Adjustment one is located on the frame as indicated below. There is a high position and a low position.

11. Adjustment two is on the leg of the head and foot board. To adjust, loosen the thumb screw on the leg and pull on the spring loaded knob with one hand and slide the leg to the desired height with the other hand. Once the desired position is found, turn the thumb screw until tight. Adjust other legs to the same position.

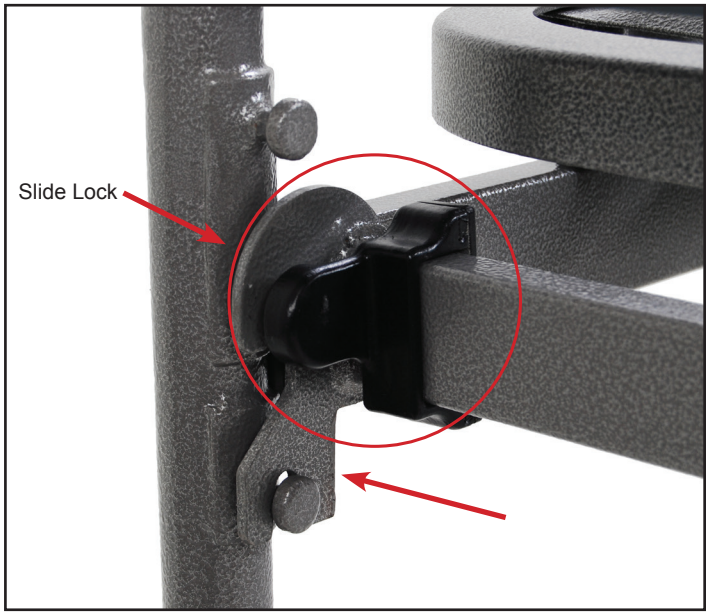

Assembly Instructions Cont.

The chart below indicates the height adjustments as they relate to the two adjustment options.

Deck Height (inches)	Deck Height Pins	Leg Hole	Wheels
11*	Lower	Low	No
13.125	Upper	Low	No
14	Lower	Low	Yes
14.152	Lower	Middle	No
16.125	Upper	Low	Yes
16.25	Upper	Middle	No
17.152	Lower	Middle	Yes
17.875	Lower	High	No
19.25	Upper	Middle	Yes
20	Upper	High	No
20.875	Lower	High	Yes
23	Upper	High	Yes

*Rails cannot be used at this height.

End Method A

Assembly Instructions Cont.

Method B
Installation of the motor from underneath the frame

B1. Attached head a foot board to frame.

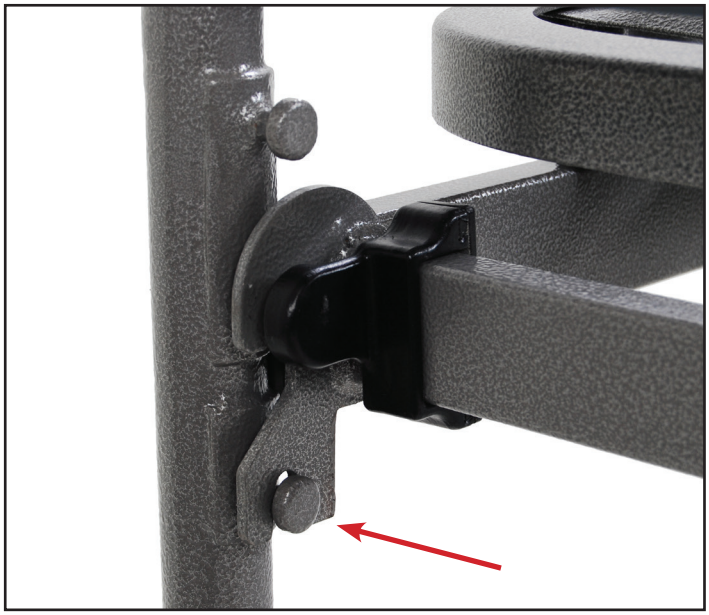

B2. Repeat for the other side.

Assembly Instructions Cont.

B3. Prior to installation, make sure that the 2 white motor blocks are in the retracted position.

CORRECT

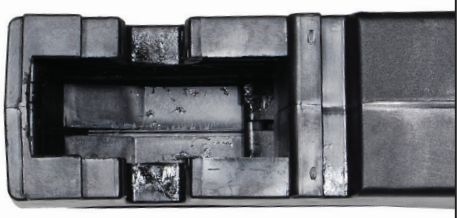

INCORRECT

B4. Remove the covers from the motor and place under the bed and aligned with the actuator under the head section. There are labels on the motor that provide direction and placement in relation to the head section.

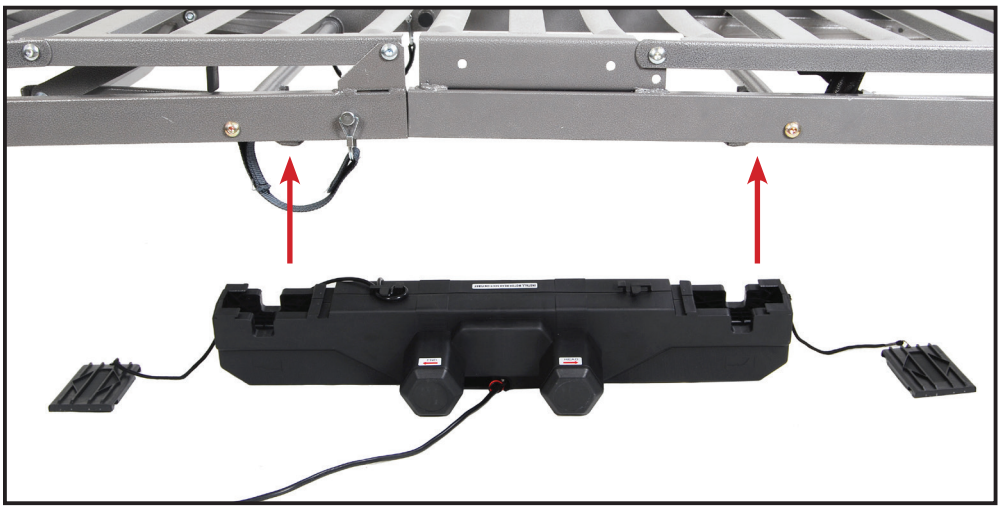

B5. With both hands, lift the motor and insert into the actuator and frame as shown. With the palm of your hand snap the motor flush to actuator bar.

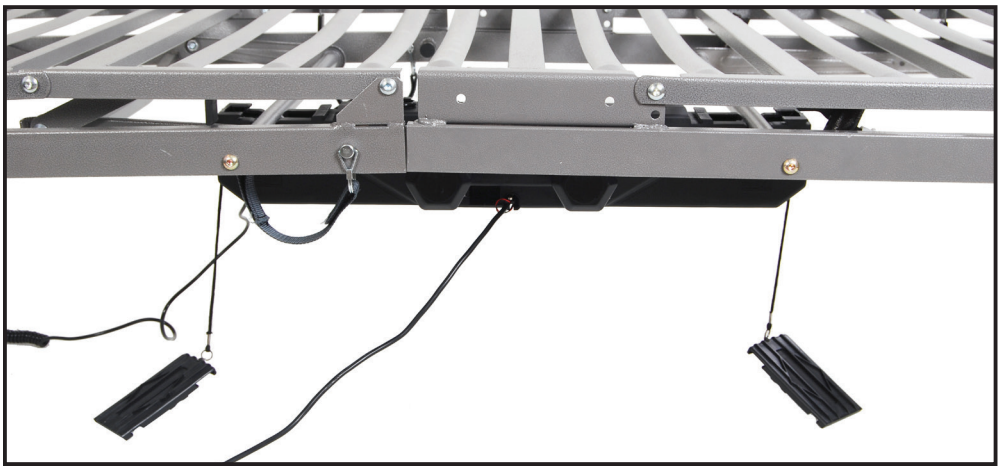

Assembly Instructions Cont.

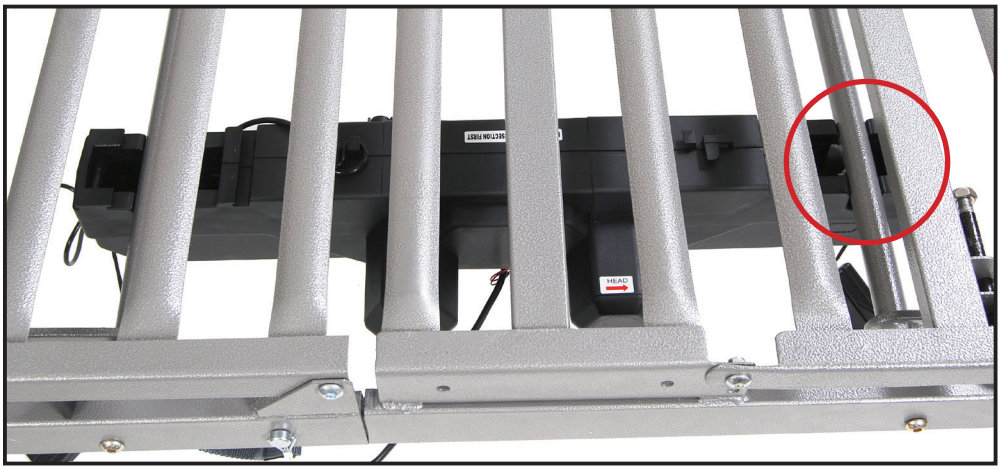

B6. Once in place, replace the motor covers to secure the motor.

Assembly Instructions Cont.

12. Adjustment two is on the leg of the head and foot board. To adjust, loosen the thumb screw on the leg and pull on the spring loaded knob with one hand and slide the leg to the desired height with the other hand.

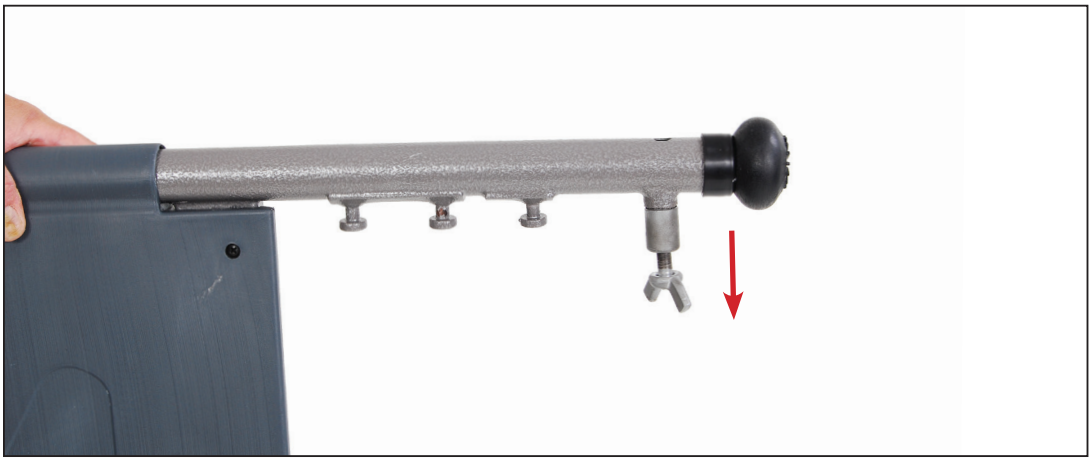

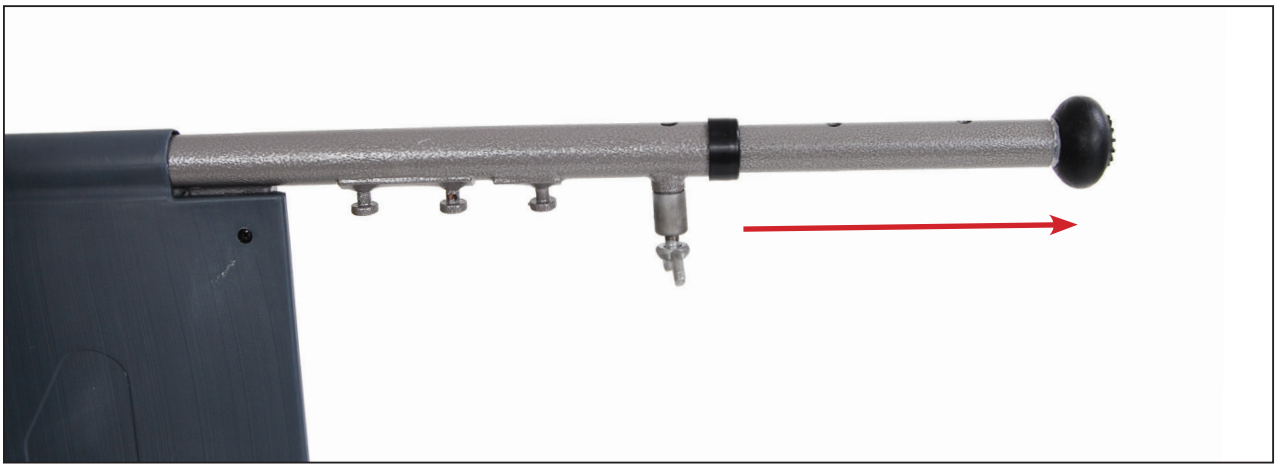

Once the desired position is found, turn the thumb screw until tight. Adjust other legs to the same position.

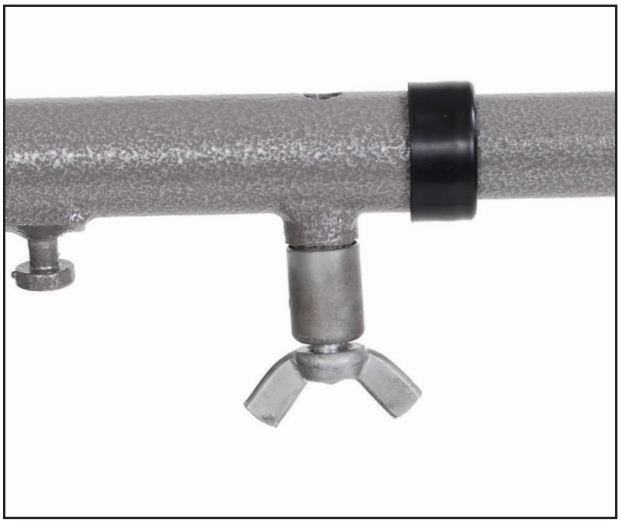

Assembly Instructions Cont.

HEIGHT ADJUSTMENT

13. The Competitor bed deck has two height adjustments.

13A. Adjustment one is located on the frame as indicated below. There is a high position and a low position.

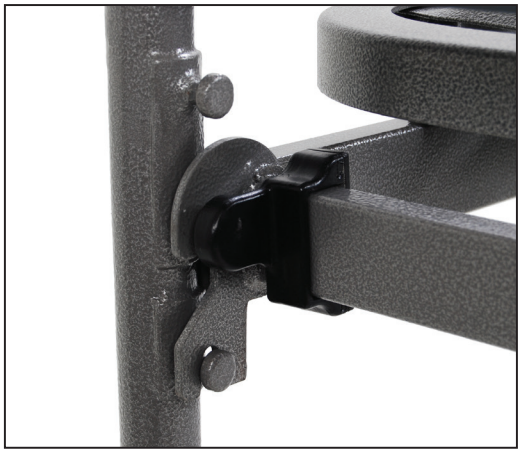

The chart below indicates the height adjustments as they relate to the two adjustment options.

Deck Height (inches)	Deck Height Pins	Leg Hole	Wheels
11*	Lower	Low	No
13.125	Upper	Low	No
14	Lower	Low	Yes
14.152	Lower	Middle	No
16.125	Upper	Low	Yes
16.25	Upper	Middle	No
17.152	Lower	Middle	Yes
17.875	Lower	High	No
19.25	Upper	Middle	Yes
20	Upper	High	No
20.875	Lower	High	Yes
23	Upper	High	Yes

*Rails cannot be used at this height.

Assembly Instructions Cont.

14. The Competitor bed comes with a caster accessory (sold separately, model # 15044SET). To install the casters, insert the stem of the caster into the leg receptacle as shown. It is recommended to install 1 non-locking caster on each bed end. The locking casters should be installed diagonally from each other.

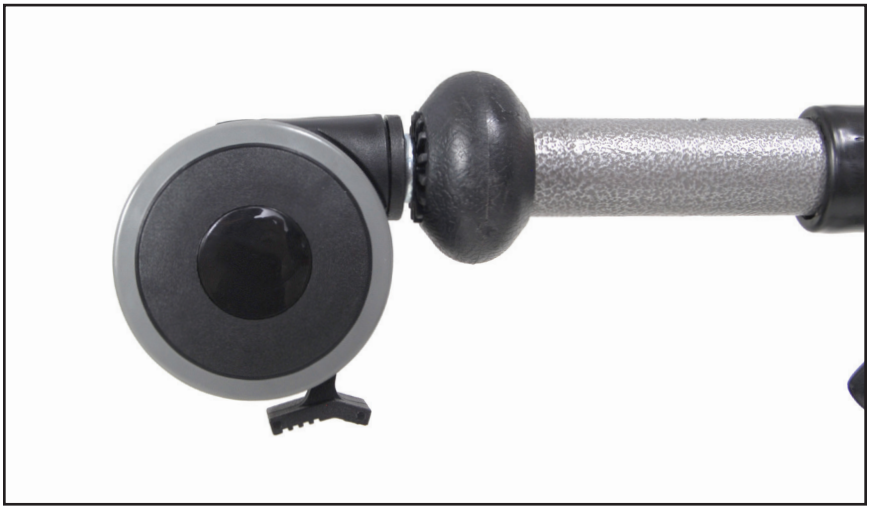

Assembly Instructions Cont.

15. To install bed rails, lift the head section and find the rail receptacle located on the frame of the bed as shown.

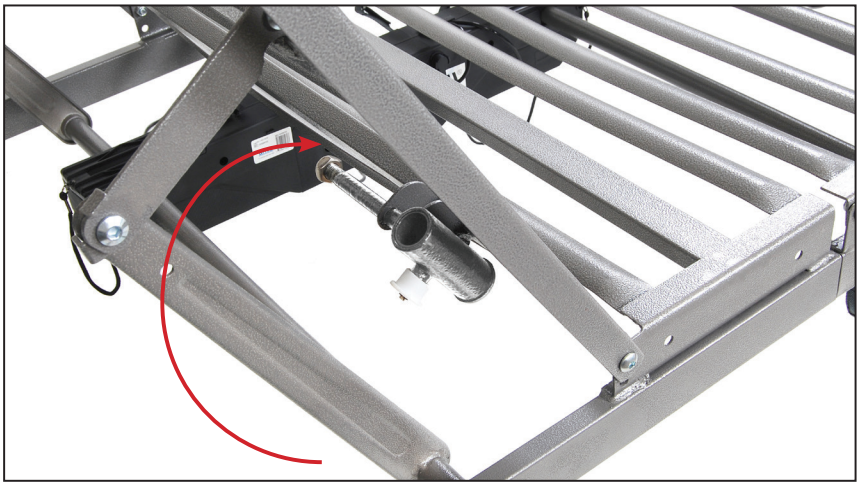

16. Pull receptacle outward and return head section to the flat position.

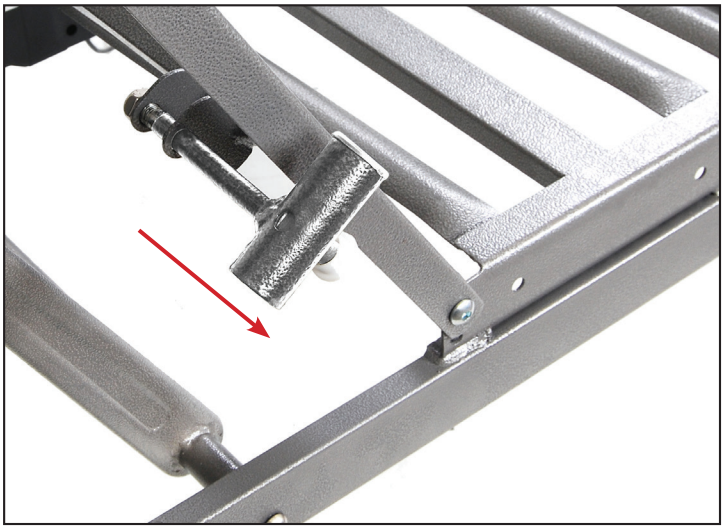

17. Turn the receptacle in order to receive the rail. Repeat for all four rail receptacles.

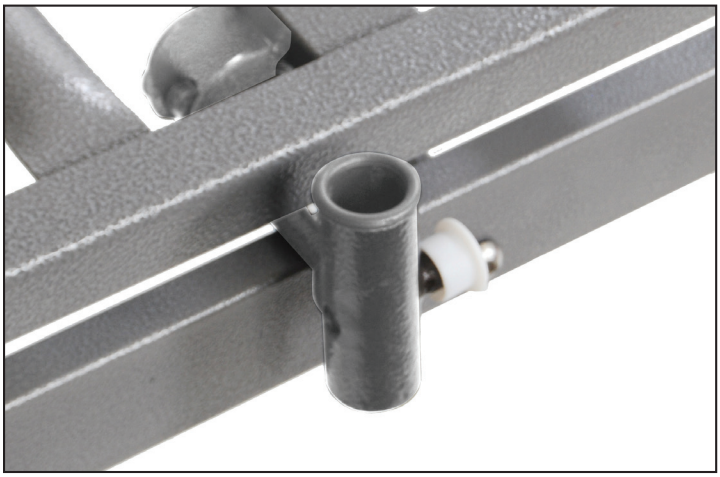

Assembly Instructions Cont.

18. Insert the bed rail into the receptacle. Repeat for the other rail.

19. To install half rails, locate the label located on the head section of the frame. The half rail clamp should be installed over this label. Align fixed clamp jaw in front of bed frame rail as shown below. Align movable clamp jaw on top of bed frame rail, and turn knob clockwise until clamp is tight, securing safety rail to bed frame rail.

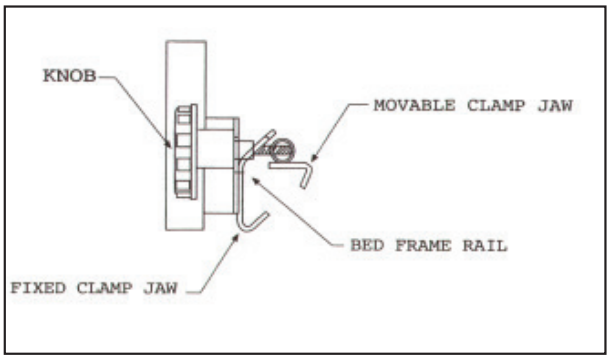

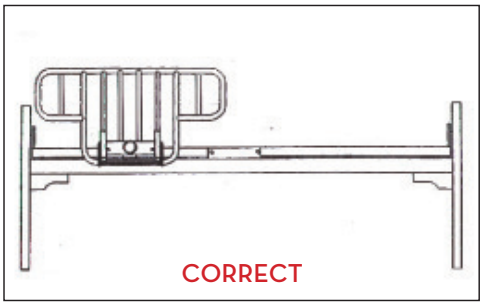

When installing bed rail, only place one (1) rail on bed per side.

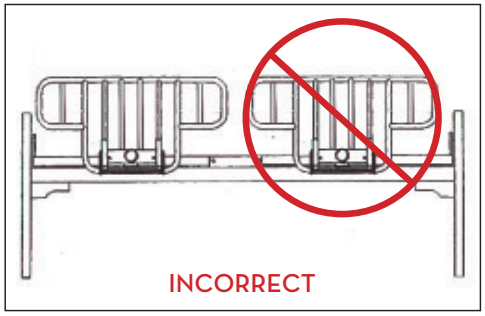

DO NOT place 2 bed rails on the same side of the bed as shown above.

WARNING - INCORRECT MOUNTING MAY CAUSE INJURY OR DEATH

Maintenance & Safety Checks

Drive recommends the following maintenance and cleaning procedures be conducted between users.

ELECTRONICS

- Check all controls to make sure all functions work properly.
  - Foot control
  - Head control
- Check all cables for damaged or frayed wires.
  - Power cord
  - Pendant cord
- Check to make sure all plugs are fully inserted or attached.
- Check 9V battery on motor and hand control and replace annually.

BED FRAME & SLEEPING SURFACE

- Visually check all welds.
  - Head section
  - Foot section
  - Main Frame
- Check joints between sleeping surface sections for loose fasteners.

CLEANING

- The metal parts of the bed are covered with a powder coating. The bed can be power washed. Clean all coated parts with mild detergent and warm water. Periodically raise head and feet sections of the bed and remove dust from frame. Also, periodically remove mattress and clean mattress deck.

WARRANTY

- Lifetime warranty on welds.
- 5 year warranty on frame.
- 5 year warranty on motor.
- 5 year on hand control.
- 1 year warranty on all other parts and components.

During the warranty period, defective items will be replaced at Drive's option at no charge.

NOTE: The competitor bed can be used with a free standing trapeze or a Drive Medical frame mounted trapeze (Item # 15560TRAPEZE). A trapeze cannot be mounted on the Competitor head board.

WARNINGS

GENERAL WARNINGS

DO NOT use this product or any available optional equipment without first completely reading and understanding these instructions and any additional instructional material such as owner's manuals, service manuals or instruction sheets supplied with this product or optional equipment. If you are unable to understand the warnings, cautions or instructions, contact a healthcare professional, dealer or technical personnel before attempting to use this equipment - otherwise, injury or damage may occur.

Read all the instructions before using the bed.

Refer to the owner's manuals for beds and rails for additional product and safety information.
After any adjustments, repair or service and before use, make sure all attaching hardware is tightened securely.

After the bed has been assembled, always test to make sure that all sections of the bed are properly and securely in place before using.

ALWAYS use caster locks except when moving the bed.

Body weight should be evenly distributed over the surface of the bed. **DO NOT** lay, sit or lean in such a way that your entire body weight is placed only on raised head or foot sections of the bed. This includes when assisting the user in repositioning or transferring in or out of bed.

Check all parts for shipping damage and test before using. In case of damage, **DO NOT** use. Contact a qualified technician for further instruction.

Close supervision is necessary when this bed is used by or near children or people with disabilities.

DO NOT let any individual underneath the bed or in between the raised bed frame components at anytime.

DO NOT permit more than one person on/in the bed at any time.

DO NOT use outdoors.

DO NOT use this product or any available optional equipment without first completely reading ¬-and understanding these instructions and any additional instructional material such as owner's manuals, service manuals or instruction sheets supplied with this product or optional equipment. If you are unable to understand the warnings, cautions or instructions, contact a healthcare professional, dealer or technical personnel before attempting to use this equipment - otherwise, injury or damage may occur.

For Dealers Only - Set-up and Assembly Instructions are in the rear of this manual. These procedures must be performed by a qualified technicians only.

WARNINGS

The March 2006 version of the FDA's bed safety guidelines are published by Hospital Bed Safety Workgroup. The latest revision of this document is available at http://www.fda.gov.

If the unit is not working properly, call a qualified technician to examine the unit and repair it.

Drive Medical products are specifically designed and manufactured for use in conjunction with Drive Medical accessories. Accessories designed by other manufacturers have not been tested by Drive Medical and are not recommended for use with Drive Medical products.

Keep all moving parts, including the main frame, mattress deck (head and foot springs/sections) and all drive shafts free of obstruction (i.e. blankets/sheets, heating blankets/pads, tubing, wiring, etc. and other types of products using electric cords which may get tangled around the bed, side rails or legs) during operation of the bed.

Keep the product a minimum of 12 inches away from any direct heat source.

Make sure head and foot springs/sections are connected securely to the universal bed ends before use.

Physically challenged individuals who cannot prevent themselves from rolling/climbing out of the this bed may require alternative safe means of restraint.

Procedures other than those described in this manual must be performed by a qualified technician.
Risk of injury to persons - **DO NOT** place video equipment such as televisions or computer monitors on bed.

NEVER allow patients to use trapeze or traction units as a total individual weight support.

Trapeze units are to be used only for assisting the patient in repositioning or transferring into or out of bed.

Trapeze units must be positioned on a universal bed end as near as possible to the center point of the bed end.

The bed is not designed to be used as a patient transport. When transporting a patient, use an approved patient transport. Otherwise, injury or damage may result.

The bed may be equipped with locking casters. When transferring into or out of the bed, always lock the locking caster(s). Inspect for correct locking action on caster locks before using bed. Even with casters properly locked, some flooring surfaces such as tile or wood, will allow the bed to move under some conditions. Use on surfaces such as these must be evaluated by the care provider.

The initial set up of this bed must be performed by a qualified technician.

WARNINGS

The total weight limit of the Drive Medical 36-inch (91.4 cm) wide Manual/Electric bed (including accessories, mattress, occupant and any other person/object positioned on the bed) is 450 pounds (204 kg.); 350 pounds (158 kg) patient weight.

Use this bed only for its intended use as described in these instructions. **DO NOT** use attachments not recommended by the manufacturer.

After raising/lowering the head/foot end of the bed, check the distance between the bottom of the bed rail and the mattress. If there is excessive distance between the bottom of the bed rail and the mattress in which individuals may become entangled, adjust the height of the bed rail (if applicable), or provide alternative means of patient protection.

Once patient assessment concludes that the patient's condition increases the chance of entrapment, the bed **MUST** be in the flat position when left unattended.

Proper patient assessment and monitoring, and proper maintenance and use of equipment is required to reduce the risk of entrapment. Variations in bed rail dimensions, and mattress thickness, size or density could increase the risk of entrapment. Visit the FDA website at http://www.fda.gov to learn about the risks of entrapment.

Replacement mattresses and bed side rails with dimensions different than the original equipment supplied or specified by the bed frame manufacturer are not interchangeable. Variations in bed side rail design, width and thickness or firmness of the mattress could cause/contribute to entrapment. Use only authorized Drive Medical replacement parts and/or accessories otherwise the warranty is void. Drive Medical will not be responsible for any damage or injury that may result.

To reduce the risk of entrapment make certain that the bed rail cross braces **DO NOT** exceed the width of the mattress. Mattress **MUST** fit bed frame and side rails snugly to reduce the risk of entrapment.

When operating this bed, **ALWAYS** ensure that the individual utilizing the bed is positioned properly within the confines of the bed. **DO NOT** let any extremities protrude over the side or between the bed rails when performing these functions.

Drive Medical recommends that the mattress be centered on the bed frame. Otherwise, individuals may become entangled between the bed rail and the bed frame.

Mattress **MUST** fit bed frame and assist rails snugly to reduce the risk of entrapment.

SAVE THESE INSTRUCTIONS

NOTE: Updated versions of this manual are available on www.Drive Medical.com.

WARNINGS

BED RAIL WARNINGS

Although bed rails are not rated to any specific weight limitation, the bed rails may become deformed or broken if excessive side pressure is exerted on the bed rails. The bed rail is not an assist rail for getting into or out of bed. **DO NOT** use the bed rails as push handles when moving the bed.

Always test to make sure that the side rails are properly and securely in place before using the bed.

DO NOT install the optional bed rails without reading and understanding all of the instructions in the instruction sheet that accompanies the bed rail kit.

DO NOT use the side rails as push handles for moving the bed.

These bed rails are intended to prevent an individual from inadvertently rolling out of bed. **DO NOT** use for restraint purposes.

When used with a manual/electrical bed, the bed rails **DO NOT** fall under any weight limitations. Bed rails can be deformed or broken if excessive side pressure is exerted on the bed rails. These bed rails are used for the purpose of preventing an individual from inadvertently rolling out of bed. The bed rails are **NOT** intended nor may be used for restraint purposes. If an individual is capable of injuring himself/herself, a physician or a healthcare professional should be consulted for alternative means of safe restraint.

ELECTRICAL WARNINGS

A safety feature of this product includes protection against overheating caused by excessive or extended periods of operation. Depending on the duration, this includes multiple or repeated adjustments or the use of multiple functions at one time. To ensure trouble free operation, always allow a slight pause between multiple adjustments and avoid pressing more than one function button at a time. If thermal protection activation should occur, the bed will not respond to pendant commands. Given this situation, release the pendant button and allow the bed unit to sit for several minutes. This will allow the protection function time to reset and restore bed function. Depending on severity of the initial overheating, this could take up to 30 minutes.

Allow a slight pause between adjustments and avoid pressing multiple buttons at the same time. If pendant buttons are depressed too rapidly or multiple buttons are pressed at the same time, the desired feature may not activate. Simply release the pendant button, permit a slight pause and then activate the next operation.

ALWAYS remove manual crank(s) before performing electronic functions. Otherwise, the crank(s) will turn when the motor is on and could cause personal injury or damage to the bed.

Always unplug the bed from the electrical outlet before cleaning.

DO NOT open assemblies such as the motors, pendant, junction boxes or gear boxes. No user serviceable parts are inside. Only qualified technicians are permitted to repair these parts. If unqualified individuals perform any work on these beds, the warranty is void.

WARNINGS

DO NOT place pendant under or between objects. This may unintentionally press the buttons and may cause injury or damage.

Electronic equipment may be influenced by Radio Frequency Interference (RFI). Caution should be exercised with regard to the use of portable communications equipment in the area around such equipment. If RFI causes erratic behavior, unplug the electric bed **IMMEDIATELY**. Leave unplugged while transmission is in progress.

Ensure all cables and cords are routed such that they will not become entangled or pinched. Otherwise damage or injury may result.

If a button on the pendant does not release or sticks, the bed spring will not stop moving.

If a liquid is spilled in or around the electric bed, unplug the electric bed before cleaning. Clean up the spill and allow the electric bed or the area around the electric bed to dry thoroughly before using the electric controls again.

Inspect the covering of the bed's control panel and the patient control panel to assure that the covering is not cracked or damaged.

Keep all electrical cords away from heated or hot surfaces.

Keep the cord away from heated surfaces.

NEVER operate if the unit has a damaged cord or plug. If it is not working properly, call a qualified technician for examination and repair.

NEVER operate this bed if it has a damaged cord or plug, if it is not working properly, if it has been dropped, damaged, or dropped into water. Return the bed to a service center for examination and repair.

On Full Electric beds, the Hi/Lo crank **MUST** be removed before the bed is used. Failure to remove the crank may cause damage or personal injury.

Refer servicing to qualified personnel only. Grounding reliability depends upon a properly grounded wall outlet.

The pendant and power cords must be routed and secured properly to ensure that the cords **DO NOT** become entangled, pinched and/or severed during operation of the electric bed.

Unplug from the outlet before servicing.

Unplug the power cord from its power source before performing any maintenance on the manual/electric bed. **DO NOT** unplug the power cord from the junction box. Damage to cord will result.

WARNINGS

Use caution when disconnecting the pendant. **DO NOT** press pendant buttons.

When bed is not to be used for an extended period, unplug electric bed from the wall outlet.

When using an extension cord, use only a three wire extension cord having at least 16 AWG (American Wire Gauge) wire and the same or higher electrical rating as the device being connected. Use of improper extension cord could result in a risk of fire and electric shock. Three to two prong adapters should not be used. Use of three prong adapters can result in improper grounding and present a shock hazard to the user.

When using nasal or masked type oxygen administering equipment, the oxygen or air tubing **MUST** be routed and secured properly to ensure that the tubing does not become entangled and/or severed during normal operation of the bed.

DO NOT use near explosive gases.

Possible fire hazard when used with oxygen administering equipment other than nasal or masked type.

Use masked or nasal type oxygen administering equipment only in conjunction with this bed. The use of **ANY** other type of oxygen administering equipment can result in a fire hazard.

99 Seaview Boulevard
Port Washington, NY 11050
Phone: 516-998-4600
Toll Free: 877.224.0946
Fax: 516.998.4601
www.drivemedical.com

REV4.3.5.14