Installation Manual

HAULWAY™ HD Scooter & Power Chair Lift

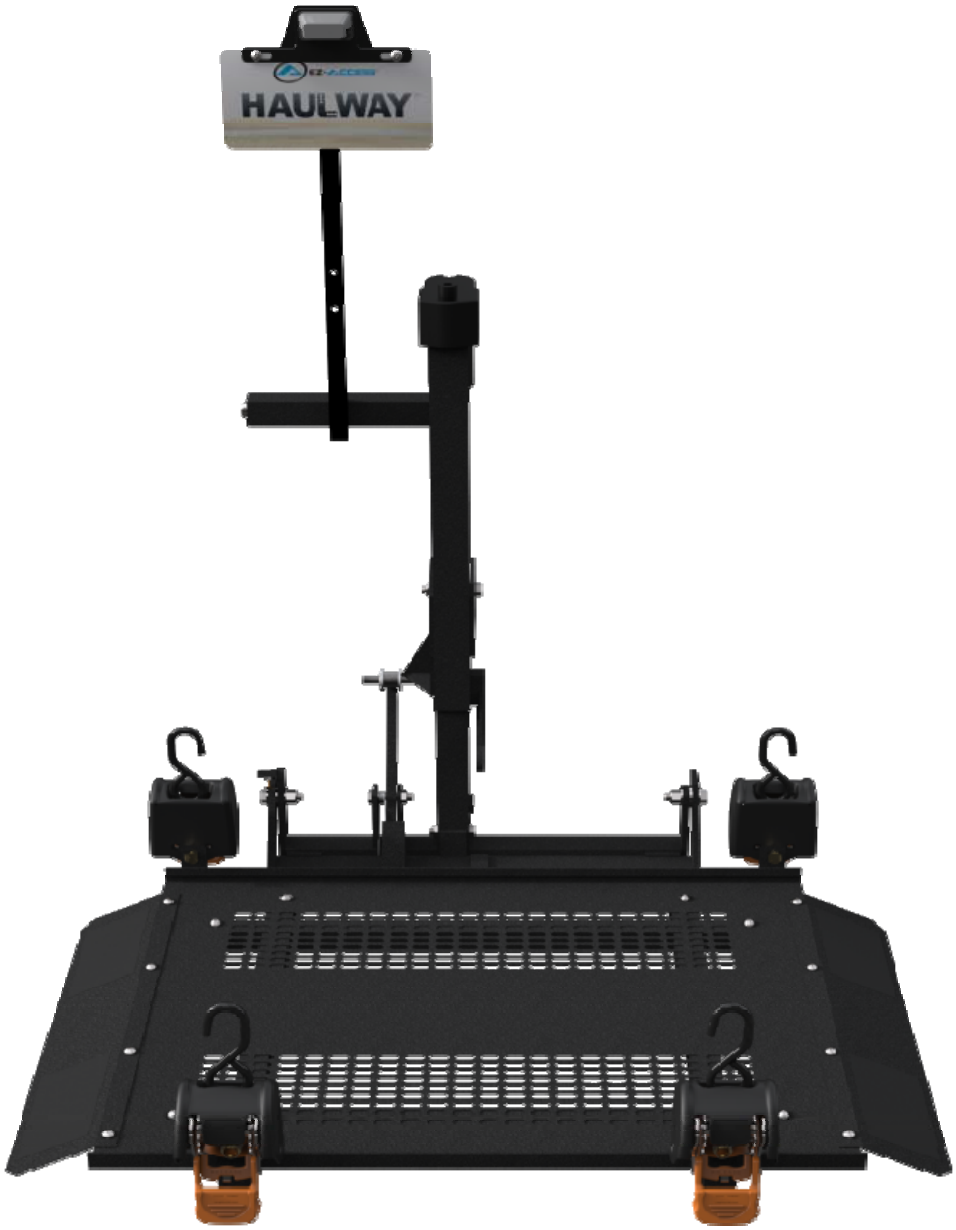

3-YEAR WARRANTY. Please register at www.ezaccess.com/warranty-satisfaction.
© Homecare Products, Inc. All rights reserved. All text and images contained in this document are proprietary and may not be shared, modified, distributed, reproduced, or reused without the express written permission of EZ-ACCESS®, a division of Homecare Products, Inc.

Manufactured in the USA

14616 REV 11-11-15

TABLE OF CONTENTS

SYMBOL MEANINGS AND SAFETY WARNINGS 3

BEFORE YOU BEGIN 4

INSPECTION 4

PROPER SET UP, MAINTENANCE, AND USE 4

SHIPMENT CONTENTS 5

TOOLS NEEDED 5

INSTALLATION HARDWARE 5

INTRODUCTION 6

WIRING YOUR VEHICLE 7

ATTACHING THE L-TUBE TO THE LIFT 7-8

ATTACHING THE LIFT TO THE VEHICLE 8

ATTACHING THE WIRE HARNESS TO THE LIFT 8

ATTACHING THE LICENSE PLATE HOLDER 8-9

TIGHTEN STABILIZER/ANTI-SWAY BOLTS 9

PLATFORM RAMP ASSEMBLY 9

CARGOBUCKLE RETRACTABLE TIE DOWN STRAPS 10

FINAL LIFT ADJUSTMENTS 11

MISCELLANEOUS INFORMATION 12

SYMBOL MEANINGS

⚠ This is the **WARNING** symbol. This symbol may appear in various colors and in conjunction with other symbols. The **WARNING** symbol indicates a failure to obey that safety warning could result in property damage, damage to equipment, serious personal injury or death as well as the serious personal injury or death of others.

✋ This is the NOTE symbol. This symbol may appear in various colors and in conjunction with other symbols. This indicates a failure to obey all notes could result in improper operation, less-than-optimum equipment performance, and at the sole discretion of the equipment manufacturer, may void your warranty.

⚠ **SAFETY WARNINGS:** The safety warnings throughout this manual, and on your equipment, if any, are for the protection of people and property. Failure by any operator to obey any safety warning will result in a waiver of all liabilities, loss of your warranty and could result in equipment damage and or failure, injury to property, risk of serious bodily injury, and or death.

⚠ Read the Owner Manual in its entirety. Understand and learn the location and function of all the features, safety devices, and labels before operating any HAULWAY Lift.

⚠ Do not exceed the HAULWAY Lift weight capacity of 325 lbs (147.4 Kg).
Do not use HAULWAY Lift for anything other than its intended purpose of lifting mobility devices.

⚠ Keep all body parts away from moving components during HAULWAY Lift operation.

⚠ Never sit on any scooter or power chair while lift is in motion.

⚠ Never play on or near the HAULWAY Lift

⚠ Turn off power and engage the brake on all mobility devices prior to lifting with the HAULWAY Lift.

⚠ Remove ice, snow, leaves, and other potentially unsafe materials from HAULWAY Lift and before each use.

⚠ Inspect HAULWAY Lift for damaged, missing, or inoperable parts before each use. Never use a damaged or unstable HAULWAY Lift.

⚠ Periodically check all fasteners and verify all nuts, bolts, screws and other fasteners are undamaged and secure. Do not attempt to repair or modify the HAULWAY Lift. Only qualified technicians may service the HAULWAY Lift. Contact your dealer to schedule any needed inspections, repairs, or service.

⚠ Observe and avoid all pinch points.

⚠ Whenever not actively using the HAULWAY Lift, turn keyed power switch to “OFF” position and remove key.

⚠ Never operate HAULWAY Lift with damaged electrical wires, instead stop usage and immediately contact your dealer to schedule repairs.

⚠ Stop using HAULWAY Lift and immediately and contact your dealer for inspection and service if any defect is suspected.

⚠ Do not tamper with or attempt to modify the HAULWAY Lift or any of its components.

⚠ Use HAULWAY Lift only with a qualified helper.

⚠ Do not use the HAULWAY Lift to support, attach, or hang planters, baskets, lights, adornments, decorations, clothing, fabrics or other ornamentals or furnishings.

⚠ HAULWAY Lift components must be serviced by a qualified technician. Contact you dealer to schedule inspections, repairs or service.

⚠ Periodic inspections by a qualified technician are recommended to help prevent unsafe conditions.

⚠ HAULWAY Lift electrical conductors must be routed and situated in a manner that poses no hazards.

⚠ Before and during HAULWAY Lift operation, ensure all hair, jewelry, shirts, ties, shoe laces and all other forms of clothing and other personal ornamentation are-not and do-not hang up on anything that may create a hazard.

⚠ To prevent damage, wash HAULWAY Lift only in brushless car washes.

⚠ ✋ Correct installation, proper use, and following of instructions and obeying safety warnings of the HAULWAY Lift are necessary for safe operation.

⚠ ✋ HAULWAY Lift must only be used in a properly attached, properly sized, mechanically sound, hitch.

⚠ ✋ Maintaining all labels and manuals in legible condition is required by the HAULWAY Lift owner and is essential for safe HAULWAY Lift operation. Contact your dealer for additional information, replacement labels and manuals or to schedule inspections, repairs or service.

⚠ ✋ Your HAULWAY Lift comes with an illuminated license plate holder. For safety, always be sure your license plate is properly illuminated.

✋ Keep all panels and protective coverings in place.

✋ The HAULWAY Lift warranty is not transferable.

✋ Attempting to tamper with or modify any portion of the HAULWAY Lift will void the warranty.

✋ Using this HAULWAY Lift for anything other than its intended purpose will void the warranty.

⚠ IMPORTANT! Prior to use, read and follow all labels, installation instructions, warnings, and cautions!

⚠ Throughout this manual, the HAULWAY HD Scooter & Power Chair Lift may be referred to as the “HAULWAY lift”, or “Lift”.

⚠ BEFORE YOU BEGIN:

1. Professional installation is recommended.
2. Rated load: 325 lbs. **NEVER EXCEED RATED LOAD.**

⚠ INSPECTION (BEFORE USE):

1. To obtain a copy of instructions, warnings, and cautions, visit www.ezaccess.com.
2. Ensure all fasteners and locking mechanisms are in place and properly tightened. Regularly check and tighten as needed.
3. Check that all parts are in good condition. If any part of the system is damaged or loose, DO NOT USE until repairs can be made by a qualified installer or other qualified person.

⚠ PROPER SET UP, MAINTENANCE, AND USE:

1. Use lift only with a qualified helper.
2. Refer to and follow your mobility equipment’s Owner Guide for proper vehicle transport requirements.
3. Proper maintenance and upkeep to the lift is vital. DO NOT USE if components are damaged or unstable.
4. Confirm that the system is correctly leveled and positioned securely. Periodically check for lose hardware.
5. **WARNING**! Metal conducts electricity. Do not use with exposed wiring or attach any other electrical devices.
6. If any part of the system is damaged or loose, DO NOT USE until repairs can be made by an approved dealer or other qualified person.
7. Never use for moving anything other than mobility equipment.
8. Only use components supplied or approved by manufacturer with system.
9. Do not sit, stand, climb, or play on or around lift.
10. Properly support and restrain lift in transit and storage.
11. Do not use if surface is covered with ice and/or snow.
12. Always, keep lift clear of dirt, leaves and other debris that may accumulate on the surface.
13. Confirm that the lift is correctly leveled and positioned securely.
14. For additional care, use or safety information, please call 1-800-451-1903.

Shipment contents:

- ✓ Lift, complete with motor/actuator assembly
- ✓ (1) Universal tray
- ✓ (1) Retractable tie down strap
- ✓ 23’ of 10 g/2 wire
- ✓ Packet with the necessary hardware for the installation (see item list below)
- ✓ Illuminated license plate holder
- ✓ Installation instructions
- ✓ Owner’s Manual

⚠ Check the contents of the box. If any parts are missing or damaged, immediately contact the dealer that sold you the lift. Do not attempt to install or use a lift that has missing or damaged parts.

✋ Depending on your unique situation, an L-Tube or Swingaway will be required. Consult your dealer if you have questions.

Tools needed

- ✓ Level
- ✓ Wrenches (7/16”,1/2”, 9/16”, 3/4”)
- ✓ Phillips Screwdriver
- ✓ Wire strippers
- ✓ Wire crimpers
- ✓ Tape measure
- ✓ Adjustable wrench
- ✓ Torque Wrench (up to 75 ft. lbs.)

Installation Hardware (Item List):

QTY	PART
1	1/2-13 x 3-1/2” bolt, fully threaded
1	1/2-13 x 3-1/2” bolt, partially threaded
1	1/2-13 Nyloc nut
1	30 amp circuit breaker with washers and nuts
2	Self-tapping screws
2	Size 10 ring connectors
2	3/8” ring connectors
2	Female tabs (yellow)
2	Male tabs (yellow)
1	Male bullet connector (blue)
1	Female bullet connector (blue)
6	1/4-20 x 3/4 phillips truss head screws
4	1/4-20 x 3/4 hex head screws
6	1/4-20 Nyloc nut
1	Strip quick splice connector
	6’-8’ 14 gauge wire
7	Zip ties 4”
7	Zip ties 14”

Introduction

- ✓ Never attempt to pick up the lift from the box, ground, or on/off vehicle alone.
- ✓ Knowing the lift's adjustments and the tips on correct installation procedures will save you time, energy and prevent possible injury.

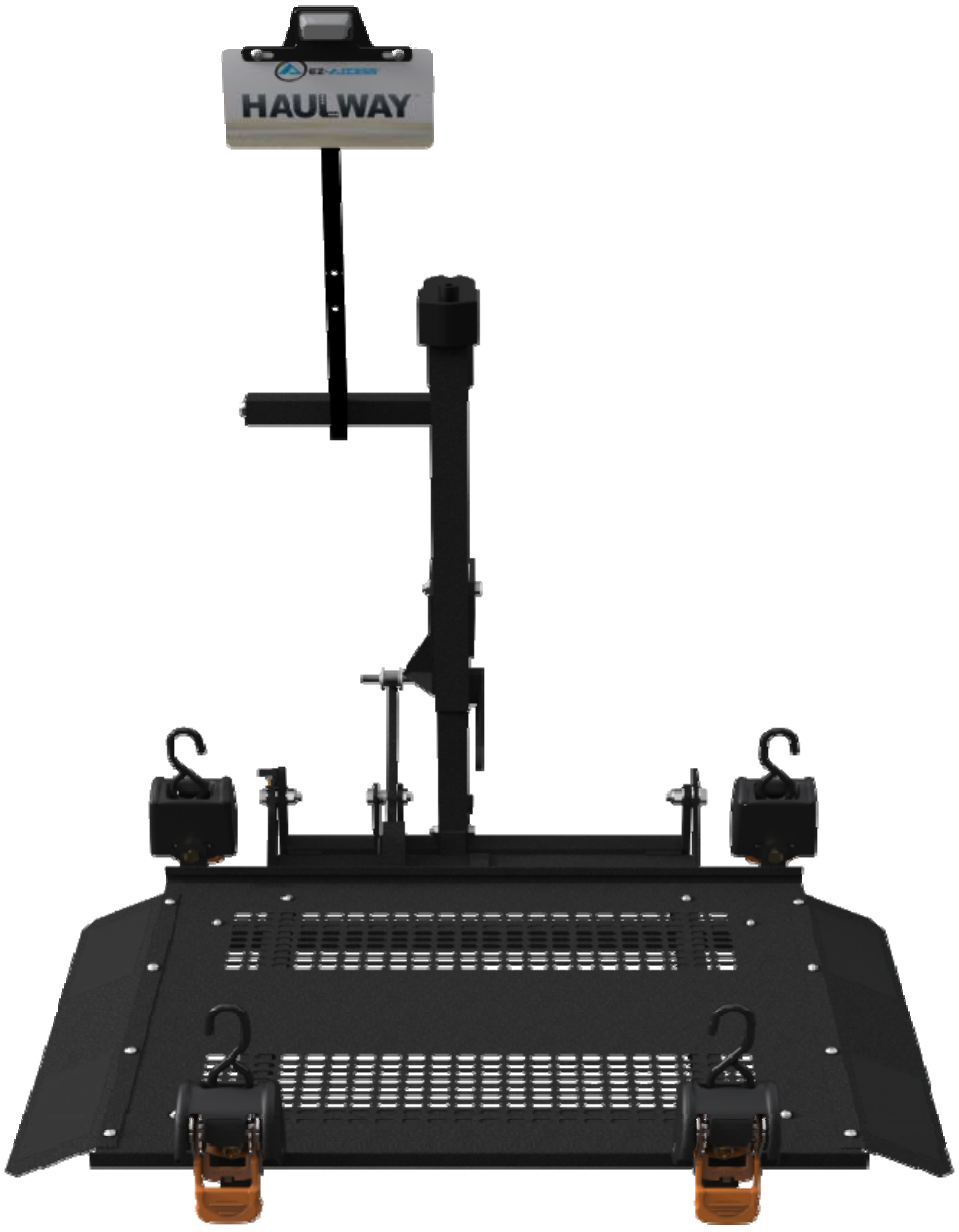

HAULWAY™ HEAVY DUTY UNIVERSAL LIFT

1. WIRING THE VEHICLE

1.1 Take the roll of Ten-Gauge, Two Conductor (10g/2) wire that is provided and start laying out wiring, beginning at the battery, and working through to the hitch area.

⚠ **ALWAYS** layout, route, and secure the wire, using the supplied zip ties, before attaching any wires to the battery. Once the wire has been routed and secured in place, then attach the black wire to the NEGATIVE terminal of the battery, using the Ring Terminal provided.

✋ The supplied zip ties work for most installations, you may need to obtain additional zip-tie sizes if your particular installation needs them in order for the wires to remain safe from damage and secure.

⚠ **DO NOT ATTACH THE WHITE WIRE UNTIL THE VERY END OF THE INSTALLATION.**

1.2 Find a place close to the battery to attach the 3 amp circuit breaker, using the 2 self-tapping screws provided.

✋ Make sure it is close enough to attach the white wire to the positive terminal, which will be done in later step.

1.3 Route the wire, from the battery, to the rear of the vehicle, running along the frame, or in a location which protects the wires from damage.

⚠ Be sure when routing wiring you avoid all levers, steering, movable parts, and exhaust. On newer vehicles equipped with on-board computers, you should route the wire away from these areas because of possible interference and malfunctions.

⚠ ✋ If you have any questions regarding the vehicle's computer or proper routing for the Haulway lift wiring, consult a vehicle manufacturer's dealer in your area before attempting installation.

1.4 Leave wire at rear of vehicle; the remaining connections will completed in a later step.

2. ATTACHING THE L-TUBE TO THE LIFT

2.1 Measure the distance from the ground to the bottom of the hitch. There are 3 holes in the L-tube or the Swingaway. It is critical to the lift function that it be mounted in the correct hole.

✋ Use lift only with EZ-ACCESS HAULWAY L-tubes or Swingaways.

2.2 Class II & Class III L-tubes are available. Swingaways are available in Class III only.

2.2.1 If the distance is 10-12 inches – use the top hole.

2.2.1 If the distance is 13-14 inches – use the middle hole.

2.2.3 If the distance is 15-17.5 inches use the bottom hole.

2.2.4 If the distance is greater than 17.5" a special L-tube or hitch lowering adapter will be needed

✋ The motor that is supplied with the hitch is regulated by a clutch. If the height is exceeded, the lift may not reach the ground. If the lift is set too low, it may not allow the fold up lever to engage properly.

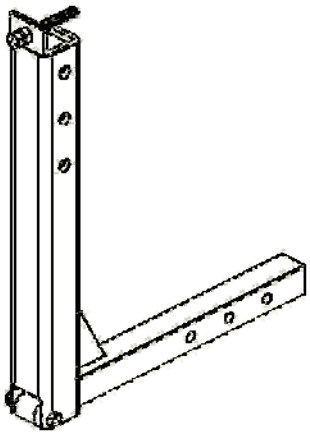

CLASS II L-TUBE

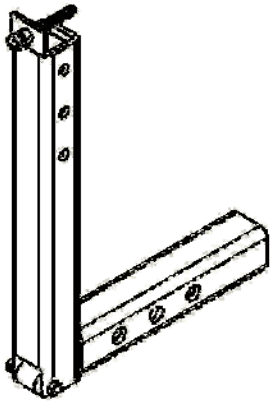

CLASS III L-TUBE

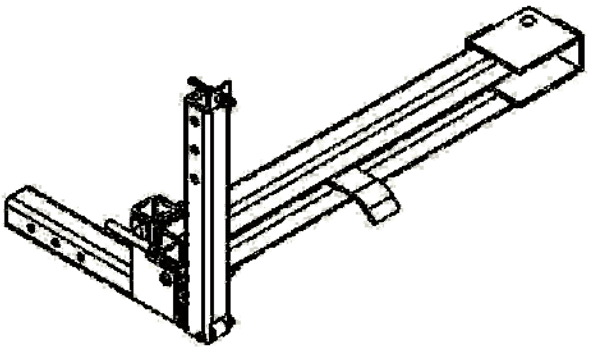

SWINGAWAY

2.1 Insert the 1/2-13 x 3½ " bolt through the side bracket of the lift and the proper hole in the L-tube.

2.2 Put on the ½" Nyloc nut and tighten.

✋ DO NOT OVERTIGHTEN. Tighten only enough to give a snug fit. This will allow the mast to swivel around the L-tube.

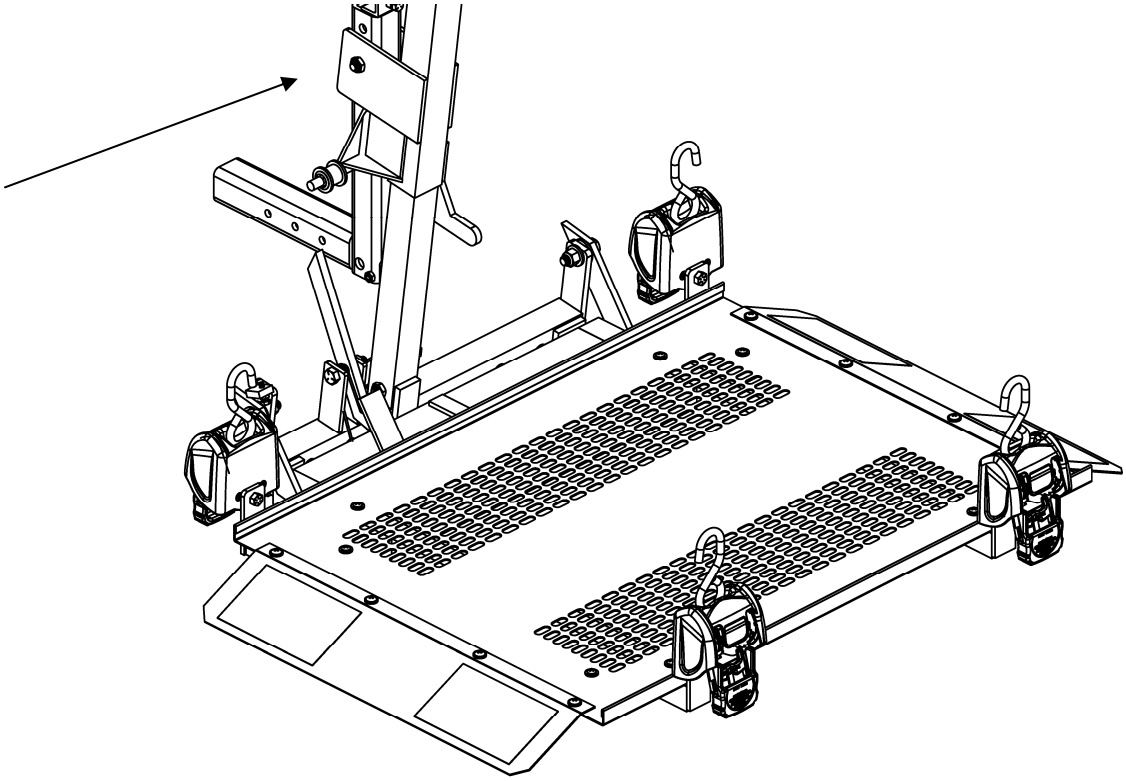

3. ATTACHING THE LIFT TO THE VEHICLE

3.1 Insert the lift (attached to the L-tube or swingaway) into the receiver until one of the pre-drilled holes lines up with the hitch pin hole. Make sure to keep the L-tube and swingaway as close to the bumper as possible while still allowing the fold up lever to operate without interfering with the bumper. (You will need approximately 1¼").

3.2 Insert the ½ - 13 x 2 1-2" bolt through the hitch receiver and the larger hole in the L-tube. (Note: the L-tube or swing away has one larger hole and one smaller threaded hole. This is designed to minimize the movement of the lift while driving.

3.3 Secure bolt with the Nyloc jam nut and tighten.

4. ATTACHING THE WIRE HARNESS TO THE LIFT

4.1 Route the wire coming out of the motor along the mast and L-tube secure using provided wire ties.

4.1.1 An alternate method: Route the motor wire down the center of the L-tube and out of the 11/16" hole at the bottom of the L-tube.

4.2 Fasten the motor wire to the wire that was run from the battery attaching black to black and white to white.

4.3 Attach the white wire to the battery post.

4.4 Insert the keys and turn to the right to ensure the lift has power to the motor. (Note: If lift is wired correctly turning keys to the right should lower the lift). The HAULWAY lift should now unfold and start lowering.

4.5 Lower lift to the ground to ensure that the lift has been installed at the correct height. If lift does not reach the ground, repeat the steps in section 2 to correct this issue.

4.6 If motor does not have power, check all connections to ensure they are secure.

4.7 If lift goes in the opposite direction (up when turning to the right), make sure all connections are black to black and white to white.

✋ If lift does not operate or have power, please contact your dealer.

5. ATTACHING THE LICENSE PLATE HOLDER

5.1 Attach the license plate to the bracket on the key tube using (2) 1/4" – 20 x 1" hex bolt provided and tighten using a washer and 1/4" Nyloc nut.

5.2 A standard two-contact trailer connector is included with the license plate lamp.

✋ If your vehicle is not equipped with the proper connector, you can use a wire splice to achieve the same result.

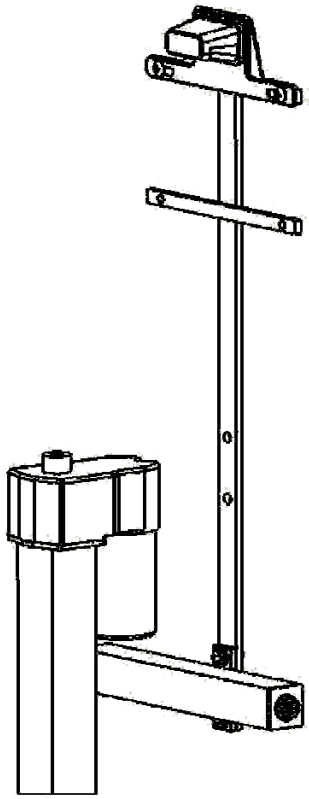

6. TIGHTEN STABILIZER/ANTI-SWAY BOLTS

6.1 If your vehicle has anti-sway bolts, they may be tightened at this time making sure that the lift is level.

7. PLATFORM/RAMP ASSEMBLY

7.1 The HAULWAY HD platform comes pre-attached to the lift frame. If platform has been removed use (4) #14 x ¾ Phillips Pan Head self-tapping screws to attach the platform to the lift frame.

7.2 The ramps for the platform come pre-assembled to the lift platform. If the ramps have been removed, attach using (8) ¼ - 20 x ¾ Phillips Truss Head Screws with washer and nut.

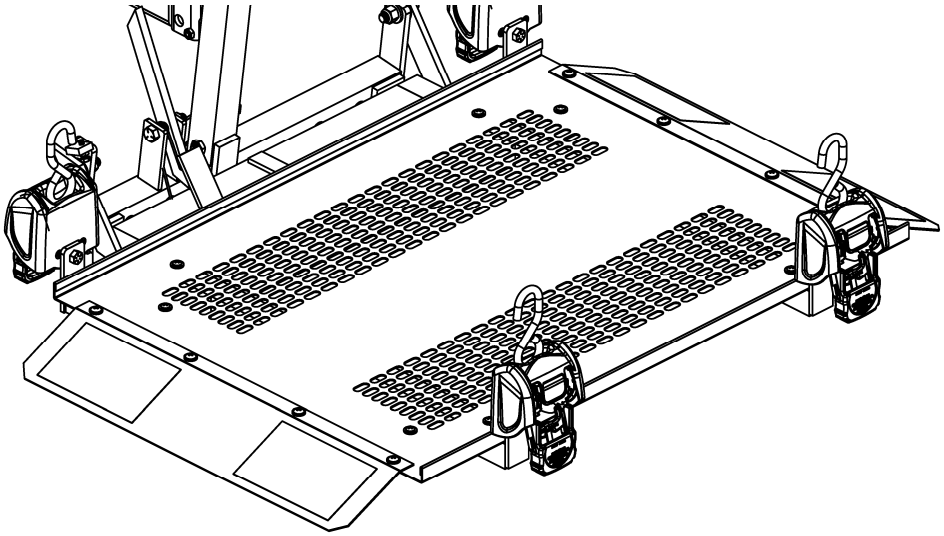

8. CARGOBUCKLE RETRACTABLE TIE DOWN

8.1 There are (4) retractable tie downs that come pre-attached to the lift.

8.2 Ensure bolt and nut attaching the strap is tightened and the strap are in an upright position.

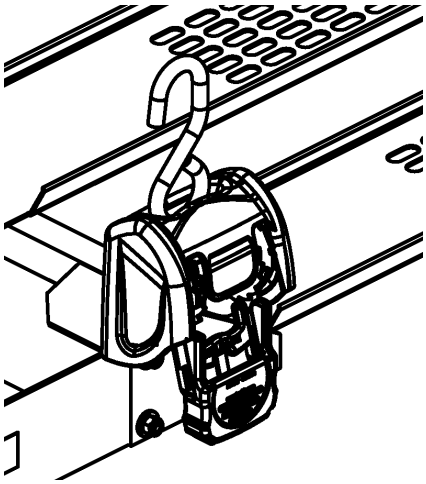

9. FINAL LIFT ADJUSTMENTS

9.1 Raise the Haulway lift to its full upright position.
9.2 Loosen the locknut (1A)
9.3 Adjust screw (1B) to make contact with the mast.
9.4 Re-tighten the locknut (1A)

⚠ ✋ DO NOT OVERTIGHTEN. Over-tightening will cause damage to the mast assembly and may void the warranty.

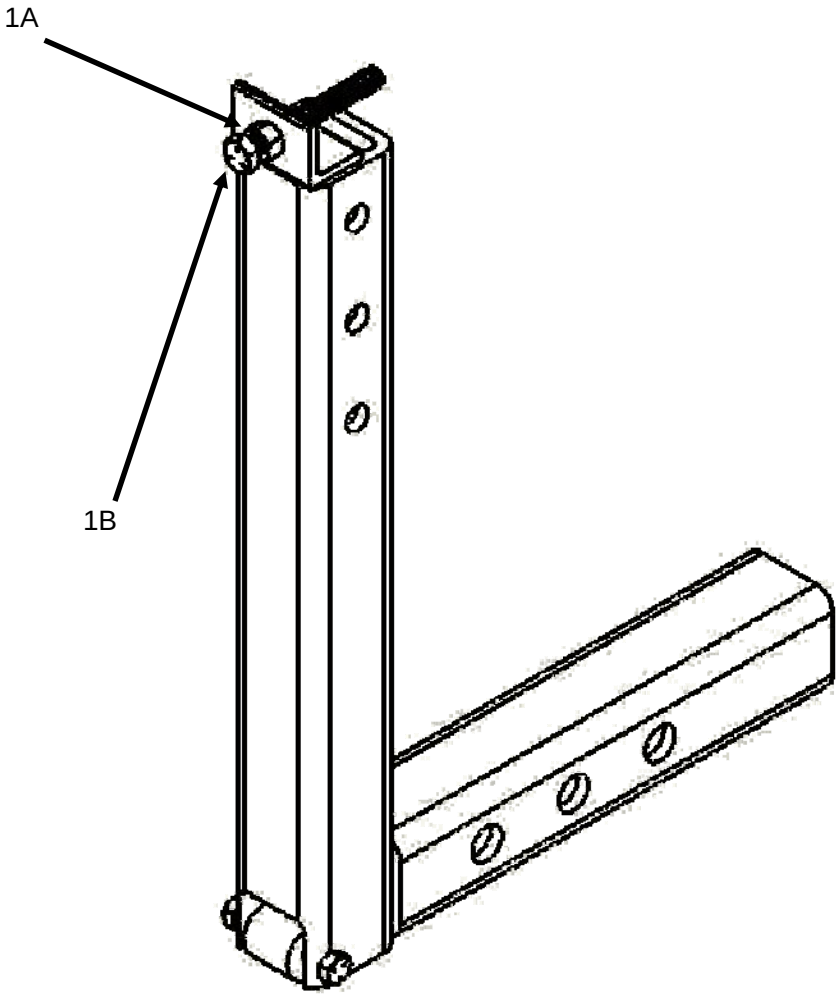

10. MISCELLANEOUS INFORMATION

10.1 The HAULWAY lift is manufactured with an automatic tilt feature that tilts the lift in toward the vehicle when loaded. This is created by the two rollers; one on the L-tube and one on the Lift as shown below.
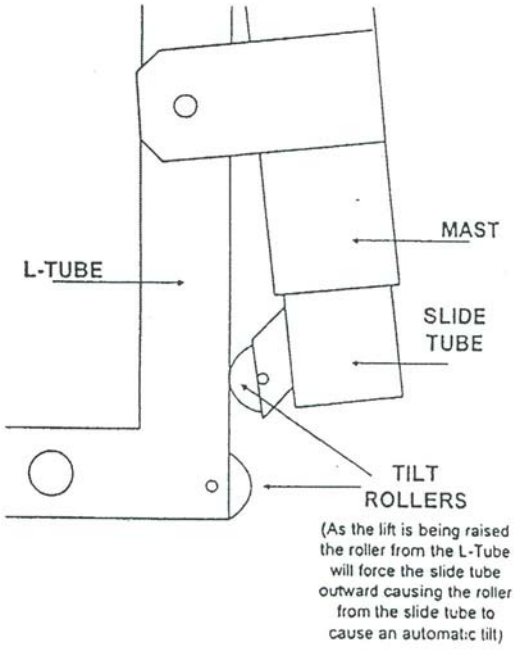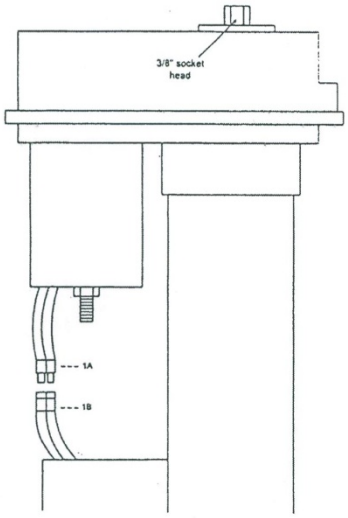
10.2 The Motor has a manual emergency crank system. Simply remove the cap on the top of the extruded 3/8" head and insert the wrench over this to raise the lift or lower down.